Research and Technology Report

1997

Acknowledgments

The preparation of *Research and Technology Report* for Summer 1996 and Academic Year 1996–97 was managed by Dr. Philip Sakimoto, University Programs Specialist, under the overall direction of Ms. Bettie White, Director of the Minority University Research and Education Division (MURED). Text editing was done by Mr. Jonathan Friedman and cover and layout design by Ms. Pamela Sams, both of the NASA Headquarters Printing and Design Office. The Allied Technology Group, Inc., of Rockville, Maryland, under the direction of Ms. Clare Hines, compiled and analyzed the data presented in this report. Allied staff members who worked on this report were Dr. Alan Goodman, Ms. Erin Barcus, Ms. Lauren Buchheister, and Mr. Sambasiva Chandu.

Any questions or comments concerning this document should be directed to:

Office of Equal Opportunity Programs
Minority University Research and Education Division
NASA Headquarters
Washington, DC 20546-0001
http://mured.gsfc.nasa.gov

On the Cover: African-American abolitionist Sojourner Truth symbolically gazes upon her namesake, the rover Sojourner, as it embarks upon the first-ever exploratory journey across the surface of Mars.

Foreword

On July 5, 1997, history was made when the robotic explorer *Sojourner* cautiously rolled down a ramp from the Pathfinder spacecraft onto the surface of Mars. The name *Sojourner* was chosen after a worldwide student essay contest for which Valerie Ambroise, then 12, of Bridgeport, Connecticut, submitted the winning entry. "It's only logical that Pathfinder be named Sojourner Truth," Ms. Ambroise wrote, "because she is on a journey to find truths about Mars."

Every life is a journey. For the students and faculty at minority universities engaged in NASA-sponsored research work, it is a journey that takes the fruits of their labor into the realms of hypersonic flight, deep space exploration and beyond, while returning substantial benefits to the people of Earth through caring about the global environment and developing technologies for improving the quality of life on Earth.

This volume highlights the most significant results from research and development projects sponsored through NASA's Office of Equal Opportunity Programs, Minority University Research and Education Division, in collaboration with Headquarters Program Offices, during Academic Year 1996–97 and Summer 1996. It includes the work of major multidisciplinary research groups, such as those sponsored under NASA's University Research Centers at Minority Institutions and Institutional Research Awards programs, as well as that of individual principal investigators sponsored under the Faculty Awards for Research or other MUREP programs. It encompasses contributions from 863 students and 388 faculty-level researchers at institutions eligible to compete for MUREP funding, including: Historically Black Colleges and Universities (HBCU), Hispanic-Serving Institutions (HSI), Tribal Colleges and Universities (TCU), and accredited minority colleges or universities with a 50 percent or greater underrepresented minority student enrollment. It stands as a testimony to NASA's response to Executive Orders 12876, 12900, and 13021, which mandate increased Federal support to these classes of institutions. We firmly believe that maintaining America's leadership in aerospace and related areas depends on fully utilizing the talents available at the Nation's minority universities.

It is a pleasure to thank the NASA Offices of Aeronautics and Space Transportation Technology, Life and Microgravity Sciences and Applications, Mission to Planet Earth, Space Flight, and Space Science, as well as the NASA Field Installations and Jet Propulsion Laboratory (JPL), for their continued strong support of the projects chronicled here.

George E. Reese
Associate Administrator for
Equal Opportunity Programs

Table of Contents

University Research Centers **7**

Aeronautics and Space Transportation Technology
High Performance Polymers and Composites Research Center
Center for Nonlinear and Nonequilibrium Aeroscience
Center for Aerospace Research (CAR)
Center for Autonomous Control Engineering

Human Exploration and Development of Space
Center for Photonic Materials and Devices
Space Medicine and Life Sciences Research Center
Center for Applied Radiation Research
Center for Food and Environmental Systems for Human Exploration of Space

Mission to Planet Earth
Center for Hydrology, Soil Climatology and Remote Sensing
Research Center for Optical Physics
Center for the Study of Terrestrial and Extraterrestrial Atmospheres
Tropical Center for Earth and Space Studies
Pan American Center for Earth and Environmental Studies

Space Science
Center for Automated Space Science

Institutional Research Awards **35**

Mission to Planet Earth
Tunable Solid State Lasers and Optical Imaging
High Performance Database Management with Applications to Earth Sciences
Land Management in the Tropics and its Effects on the Global Environment

Space Science
The Use of Decentralized Control in Design of a Large Segmented Space Reflector
Alliance for Nonlinear Optics

Faculty Awards for Research **45**

Ames Research Center (Reports and Abstracts)
Monitoring Software Through Integrity Constraint
Theoretical and Observational Studies of Solar and Extra-Solar Planetary Atmospheres
Identification of Isolation of Microgravity Reponsive CDNAs
Development of a Transdermal Delivery Device for Melatonin in Vivo

Table of Contents

Dryden Flight Research Center (Reports and Abstracts)
Chemically Derived Dense Alumina-Zirconia Composites for Improved Mechanical and Wear Erosion Properties
Development of an Ultrasonic and Fabry-Perot Interferometer FPI for Nondestructive Inspection of Aging Aircraft Structures
Hybrid Motion Planning with Multiple Destinations

Goddard Space Flight Center (Reports and Abstracts)
Exploration of Properties of Aggregated Molecules for Optical Device Applications
Formal Foundations of Agents
Basic Research in Atomic, Molecular, and Optical Physics in Support of NASA Strategic Enterprises
Estimation of Ocean Primary Productivity using In-situ Fluorescence and SeaWiFS
Effects of Aerosols and Cloud Interactions on UV, PAR and Crop Yields
The Development of a New Generation Trapped Radiation Database
Boundary Layer Processes Affecting Tropical Cyclone Intensity Change
The Accuracy of Earth Observing System Measurements of Middle Atmosphere Dynamics

Jet Propulsion Laboratory (Reports and Abstracts)
Multilayer Thin Film Capacitors for High Performance Power Applications
Fault-Tolerant and Self-Checking Logic System Design
High Tc Bolometer Development
A Prototype Object-Oriented GIS
Low Complexity, Refigurable Circuits for Data Compression

Johnson Space Center (Reports and Abstracts)
Basic Studies on CdTe Solar Cells
Assessing the Putative Mechanisms of Gravity-Induced Cellular Changes
Simulated Microgravity: A Model for Human Neural Cell Plasticity and Angiogenesis
Gravity-Induced Changes on the Steroidalgenesis by Luteral Cells of the Pregnant Rat

Kennedy Space Center (Reports and Abstracts)
Utilization of the SFC Database: A Framework for Modeling Shuttle Processing Operations
Surfactant/Supercritical Fluid Cleaning of Contaminated Substances
A Continuous Hazard Tracking and Failure Prediction Methodology
Control and Calibration of an Automatic Radiation Inspection Device CARD

Langley Research Center (Reports and Abstracts)
Phenylethynyl Containing Polyarylene Ethers/Polyimides Resin Infiltration of Composites
Microchemical Characterization and Texture Analysis of Direct Cast Titanium Alloy Strips
Active Control of Aerodynamic Noise Sources
Identification of Surface and Near Surface Defects and Damage Evaluation
Constitutive Modeling and Testing of Polymer Matrix Composites Incorporating Physical Aging at Elevated Temperatures
Visualization of Atmosphere Water Vapor Data for SAGE
Characterization of Molecular Interactions at Polymer/Metal Surfaces and Interphases

Table of Contents

Lewis Research Center (Reports and Abstracts)
Development of Synchronously Scanned Optical Parametric Oscillator (OPO) Coherent Antistokes Raman Spectroscopy (CARS) as a New Probe for Hostile Environments
Cubic Boron Nitride Alphavoltaic Devices
Polymerizable Monomer Reactants—Synthesis of Aryl Ethers
Distributed Bragg Region Sensors with Aerospace Applications
Growth and Characterization of III-V Semiconductors for Device Applications
Turbulent Premixed Methane-Air Combustion
Research to Significantly Enhance Composite Survivalibility at 550 Degrees F in Oxidative Environments
Picosecond Gated Optical Imaging of Dense Fuel Sprays

Marshall Space Flight Center (Reports and Abstracts)
Atomization in Impinging-Jet Injectors of Liquid-Propellant Rocket Engines
3-D Multiphase-Flow Modeling of Oxygen Flow Systems
Object-Oriented Software Control Architecture for Robotic Vehicles
Health Monitoring of Composite Material Structures using a Vibrometry Technique
NLO Polymers That Have Enhanced Thermal Stability and Low Alignment Decay and the Use of Microgravity to Optimize NLO Properities

Stennis Space Center (Reports and Abstracts)
Optical Rate Concept Acquisition for Classification of Remotely Sensed Spatial Data and Propulsion Test Data
Labile and Stable Soil Organic Carbon Pools Revealed by C-14 and C-13 Signatures
A Study of the Fluid Mechanics of Reacting Flows in Selected Aerospace Propulsion Devices
Analysis of the Inherent and Apparent Optical Properties in Case 1 and Case 2 Waters of the Caribbean Sea

Partnerships Awards **87**

Research Partnerships (Listing)

Ames Research Center
Solar Ultraviolet-R Radiation and Public Health in Puerto Rico
Verification of NASA Mission-Critical Software Without Sacrificing Performance

Dryden Flight Research Center
Computer Simulation of Multidisciplinary Engineering

Goddard Space Flight Center
Novel Methods of Fabrication and Evaluation of Room Temperature X-Ray and Gamma Ray CdZnTe Detectors
Laboratory Study of the Behavior of Saturated Sedimentary Material
The Magnetic Transport & Structural Properties of Pulsed Laser Deposited Magnetic Oxide Films

Table of Contents

Jet Propulsion Laboratory
Real-Time Prototyping Project

Johnson Space Center
Caffeine Metabolism: The Pharmacokinetics of Space Flight

Kennedy Space Center
Sweetpotato Stem Cuttings Database in Preparation for Flight

Langley Research Center
Mixing Noise and Thrust Benefits Using Corrugated Designs

Lewis Research Center
Ultra Sensitive Optical Strain Gauges for Plume Impingement Studies
Aerothermo Structural Analysis of Low Cost Composite Nozzle/Inlet Components
Radiation Effects on DC-DC Converters
Experimental Evaluation of Motor Drive Technologies for Future Aerospace Applications

Marshall Space Flight Center
An Unconventional Three-Dimensional Computation of Transition Aerodynamics for RLV
Novel Method for Evaluation of Uniformity and Structural Homogeneity of Ternary Wide Gap Semiconductors
Telemedicine and Rapid Identification of Microorganisms by Fourier Transform Infrared Spectroscopy
Composite Truss Design Optimization
Integrated Approach to the Prediction of Hyperpolarizability of Organic Crystals
Analysis of Friction Stir

Research and Education Partnerships (Listing)

Ames Research Center
Motion Planning in a Society of Intelligent Mobile Agents
Training Under-Represented Students in Biological Research at Fisk University
Air Traffic Control Using Neural Networks: A Proposal for Research and Educational Enhancement

Dryden Flight Research Center
Artificial Potential Field Based Motion Planning/Navigation in Two and Three Dimensional Dynamic Environments

Goddard Space Flight Center
Partnership for Space Telecommunications Education
Medgar Evers College Ocean and Environmental Science Research Program
Preservation of the Environment Through Education & Research on Remote Sensing of the Atmosphere & of Land Use/Land Cover Changes
CSTEA HBCU Academic and Research Consortium (CHARC)
Partnership Award with Minority Universities and Colleges

Table of Contents

Jet Propulsion Laboratory
Electromagnetic Wave Scattering from Volumes and Surfaces—The Aerosols and Ice Surfaces Electromagnetic Scattering
Studies on Neptunian and Uranian Magnetospheres

Johnson Space Center
Effect of Microgravity on the Disposition and Biotransformation of Therapeutic Agents Used in Space Flight: Clenbuterol as a Model
Intelligent Agents-based Scheduling

Kennedy Space Center
Applied Research in Industrial & Systems Engineering (ARISE) Center
Research and Education Experiences for Minority Undergraduates in Composite Materials
NASA Minority Institution Entrepreneurial Partnership

Langley Research Center
Development of a Portable Ground-Based Ozone LIDAR Instrument for Tropospheric Ozone Research and Educational Training
Concepts for Atmospheric Science Education (CASE)

Lewis Research Center
Consortium for Advancing Renewable Energy Technology
Research and Education in Probabilistic Structural Analysis and Reliability

Marshall Space Flight Center
Curriculum Adjustments in Mathematics for Science and Engineering Programs

Stennis Space Center
JSU-NASA Partnerships for Research and Educational Programs
NASA Stennis/Tuskegee University Partnership Program

Appendices **97**
Index by Principal Investigator
Index by State

University Research Centers

The University Research Centers (URC) at Minority Institutions program seeks to achieve a broad-based, mainstream, competitive aerospace research capability among the Nation's Historically Black Colleges and Universities (HBCU) and Other Minority Universities (OMU). The goals of the program are to:

- Foster new science and technology concepts
- Expand the Nation's base for aerospace research and development
- Develop mechanisms for increased participation by faculty and students of HBCU's and OMU's in mainstream research
- Increase the production of disadvantaged students, who are U.S. citizens and who have been historically underrepresented, with advanced degrees in NASA-related fields

Now entering its seventh year, the URC program funds research centers at 11 HBCU's and 3 OMU's. This report summarizes the activities of the URC's during the Academic Year 1996-97 and Summer 1997 reporting period. During this period, 262 professional-level investigators were involved in research projects at the URC's, including 195 faculty members, 50 research associates, and 17 postdoctoral fellows. A total of 549 students—313 undergraduates and 236 graduates—participated in these research activities. The research accomplishments were documented in 295 refereed papers or book chapters published during this time period. Significantly, 95 students were authors or coauthors of these publications. An additional 156 papers or book chapters, including 57 student authors or coauthors, were accepted for publication during this period. The broader research community was informed of this work through 642 technical presentations, including 210 presentations given by students.

During the reporting period, the URC's were able to leverage their NASA MUREP expenditures ($15.1 million, not including $3.8 million of student support) to an additional $23.8 million in new research support, $6.6 million from other NASA programs and $17.2 million from other agencies.

A major goal of the URC program is to increase the number of disadvantaged and underrepresented minority students receiving advanced degrees and entering into careers in NASA-related fields. The 549 students involved in the research projects at the 14 URCs during the reporting period represent a 12-percent increase from the 485 students involved the previous year.

Of the 549 students, 313 (57 percent) participated at the bachelor's-degree level, 179 (33 percent) participated at the master's-degree level, and 57 (10 percent) participated at the doctoral-degree level. Of the participating students, 91 percent were members of an underrepresented ethnic minority group. Perhaps most importantly, 190 degrees, including 106 bachelor's degrees, 76 master's degrees, and 8 doctoral degrees, were awarded to URC students.

The URCs perform scientific and/or engineering research relevant to the four NASA Strategic Enterprises: Aeronautics and Space Transportation Technology; Human Exploration and Development of Space; Mission to Planet Earth; and Space Science. The reports from each of the URC's, arranged according to the primary Strategic Enterprise that they support, follow.

Aeronautics and Space Transportation Technology

High Performance Polymers and Composites Research Center

Director: Dr. Eric A. Mintz
Clark Atlanta University
Atlanta, Georgia 30314-4391
Date of Original Award: 1992

INTRODUCTION

The High Performance Polymers and Composites (HiPPAC) Center utilizes a team approach in which interdisciplinary teams of chemists, material scientists, and engineers work together to conduct research in areas spanning the range of synthesis, processing, and characterization of new materials to meet aerospace needs.

RESEARCH ACCOMPLISHMENTS

Preparation and Characterization of Nonlinear Optical, Photorefractive Polymers

Polyimide-based photorefractive materials are the principal candidates for applications including high-density optical data storage and image processing. The HiPPAC Center has prepared and characterized new nonlinear optical (NLO) polyimides, which contain polyimide backbones and side chain chromophores, in which tricyanovinyl acts as an electron-accepting group and diphenylamino as an electron-donating group. The thermal properties of these NLO polyimides were evaluated by differential scanning calorimetric and thermogravimetric analysis. An E-O coefficient (r_{33}) of 7 pm/v has been obtained after the polymer film was poled briefly. After heating this polymer to 100 C for more than 1,000 hours, the E-O coefficient remains about 90 percent of the initial post-poling value. New donor-acceptor imidazole chromophores incorporating a tricyanovinyl-thiophene group have been prepared. These NLO chromophores exhibit good molecular nonlinearity and excellent solubility and thermal stability.

Synthesis, Characterization, Properties and Processing of Polyimides

Polyimides are advanced materials that have good high-temperature stability and excellent dimensional stability and mechanical properties. However, the use of polymides in aeronautics programs has been limited by the requirement of extreme processing conditions caused by very high glass transition temperatures and high melt viscosities. To improve on the processibility of polyimides and to extend their use in composite applications, HiPPAC Center investigators have synthesized and incorporated a series of new bisimide processing additives into LaRC TPI and LaRC IAX (high-performance polyimides developed at NASA's Langley Research Center). These processing additives significantly lowered the glass transition temperatures, flow temperatures, and melt viscosities, thus allowing for easier processing while producing only minimal effects on the chemical resistance and mechanical properties of the polyimides.

New processible polyimides and polyamic acids have been prepared. Thermogravimetric analysis indicates that the polymers are stable up to approximately 450° C in air. These polymers exhibit improved solubility in common organic solvents relative to the all-aromatic analogs.

Smart Material Systems

Smart material systems is an emerging technology area aimed toward the development of material systems and structures that can rearrange themselves to their optimum functional capabilities or to adapt to external stimuli by using inherent or integral functional elements such as sensors, actuators, and controllers.

A test fixture has been designed, fabricated, and utilized to measure the longitudinal piezoelectric coupling effect of piezopolymer films. The test setup consists of an Instron test frame, a power supply, and a laser extensometer. The test fixture, coupled with the test frame, provides mechanical supports to align and secure thin piezopolymer specimens.

Finite element modeling has been performed to investigate the feasibility of detecting adhesive joint debonding using a piezoelectric-induced dynamic signature. The results of modal and harmonic response analyses indicate no significant changes in either the fundamental frequency or the harmonic response of the structure when damaged.

Fabrication and Mechanical Characterization of Polymer-Based Composites

HiPPAC Center investigators are working on the design, fabrication, processing, testing, and modeling of the mechanical properties, durability, aging, and lifetime prediction of polymer matrix composites and hybrid metal composite laminates. Experimental studies were undertaken to investigate the mechanical response of four hybrid titanium composite laminate (HTCL) systems to determine whether these systems will be useful in the next generation of high-speed aircraft. Good agreement was achieved between the analytical laminate analysis and the experimental values obtained for the Young's modulus and the strength of HTCL systems.

HTCL's are also being studied as an advanced material for engine containment in the event of a rotor blade failure. Specifically, HTCL's may offer improved impact performance, resulting in lower weight and occupying less space than existing Kevlar blanket containment designs.

RELEVANCE TO NASA STRATEGIC ENTERPRISES

Polymeric NLO and photorefractive materials have applications in optical computing, information storage, and the development of "flight by light" systems. Smart material systems can be utilized for the health monitoring, vibration control, and damage control of aerospace structures. Polymer matrix composites and hybrid metal composite laminates have applications in lightweight structural materials possessing superior strength/weight and modulus/weight characteristics, as well as superior impact resistance for applications in future aerospace applications, including aircraft, missiles, and spacecraft.

BENEFITS TO SOCIETY

The research and technology under development in the HiPPAC Center will play a vital role in ensuring the safety, environmental compatibility, and productivity of air transportation and space systems and will enhance the security and economic health of the Nation.

STUDENT ACHIEVEMENTS

Undergraduate and graduate students have been an integral part of the research programs described above. These students have carried out research, coauthored papers, and made presentations at regional, national, and international professional meetings while earning degrees in science and engineering.

Lead NASA Installation: Lewis Research Center
Additional NASA Enterprise Area: Space Science
Telephone: (404) 880-6886
Fax: (404) 880-6890
E-mail: emintz@cau.edu
URL: http://www.cau.edu

Center for Nonlinear and Nonequilibrium Aeroscience

Director: Dr. Joseph A. Johnson, III
Florida A&M University
Tallahassee, Florida 32310
Date of Original Award: 1992

INTRODUCTION

Research at the Center for Nonlinear and Nonequilibrium Aeroscience (CeNNAs) at Florida A&M University is focused on plasma drag reduction, jet noise, turbulent-free shear layers, and materials characterizations. The goals of this research are: (1) to develop new physical insights and new methodologies having an impact on current and future aeronautics and space transportation technologies; (2) to provide a broad-based, important, and useful aerospace research capability at Florida A&M; (3) to develop cooperative initiatives between academic and industrial partners in order to support the Center's NASA-related research focus; and (4) to contribute to the overall quality of NASA research activities through mutually beneficial interactions with NASA Field Installations and through the identification and training of potential NASA scientists and engineers.

RESEARCH ACCOMPLISHMENTS

Interactions of a Hypersonic Shock Wave with a Turbulent Plasma

There is new evidence of a possible inverse turbulence energy cascade along with a new theoretical framework for its understanding. Turbulent plasma produced by an ionizing shock wave remains turbulent, even though the flow is brought to rest by a reflected shock wave. This provides support for the new theoretical speculations on the inherently nondissipative nature of "pure" turbulent systems.

Turbulence and Nonequilibrium Effects for Shock-Wave Drag Reduction

A possible role for nonequilibrium processes in shock-wave weakening has been found. When the relative humidity of the driver gas increases, an apparent decrease in the strength of the shock wave driven by the contact surface can arise. Thus, when the nonequilibrium process is heterogeneous nucleation, the strength of the shock wave is sensitive, in a turbulent regime, to the percentage importance of water vapor (humidity) and to the characterizing turbulent parameters. These new insights are being used in the development of new facilities for the study of plasma-induced drag reduction in supersonic and hypersonic flight for which the nonequilibrium process will be ion-electron recombinations.

Florida A&M University/CeNNAs graduate students Kyron Williams (physics) and Kester Thompson (mechanical engineering) prepare to fire the new shocked-plasma tube for research on turbulent nonequilibrium plasma molecular physics and shock-wave drag manipulation.

Evidence of a Reverse Energy Cascade in Turbulent Supersonic Free Shear Layers

Using direct estimation velocimetry and laser Doppler velocimetry on the production and evolution of kinetic energy in the turbulent free shear layer produced by the Mach 2 supersonic nozzle, it has been confirmed that the fluid flow in the nonturbulent free stream has less kinetic energy than that in the turbulent free shear layer. This represents an increase in energy in direct contrast with the possibility of a turbulence-driven dissipation, as would otherwise be expected.

Mixing Noise Reduction of a Heated Supersonic Rectangular Jet by Water Injection

There is hope for jet noise reduction from water injection with mass flow rates. To date, significant noise reduction in supersonic jets has not been achieved without some associated penalty, such as thrust loss. Based on the widely accepted notion that turbulent mixing noise plays a primary role in the noise generation, a novel approach utilizing water injection to minimize the turbulent mixing noise in jets is currently being explored. Although this technique has been previously examined, the mass flow ratios used in these investigations were very high (> 1), making it impractical to implement. In the present work, water at low mass flow ratios is injected into a heated Mach 2 rectangular jet. Several streamwise locations and water injection angles are being explored. The preliminary results have shown that water injection alters the compressible shear dynamics and seems to reduce the size of the large-scale turbulent structures.

Superplasticity and Strain Aging

CeNNAs has chosen to combine phenomenology and micromechanics to characterize superplastic materials for all ranges of temperatures and strain rates to arrive at a unified constitutive relation. Static and dynamic strain aging experiments have been performed on the nickel-based superalloy Inconel 718SPF. Yield point return experiments were performed in tension as a function of plastic strain and aging time. The strengthening observed for short aging times (< 1,000 *s*) followed a t^n power law relationship where $n \approx 1/2$. This indi-

cates that sharp upper yield points might be the result of combined bulk and pipe diffusion of a substitution solute.

RELEVANCE TO NASA STRATEGIC ENTERPRISES

CeNNAs has played a major role during the current report year on: (1) the shock-wave dynamics in weakly ionized plasmas, with special implications to current issues in hypersonic flight; (2) the fluid physics and fluid dynamics of noise, both in jets and free shear layers, with special interest in expanding current understanding of the underlying turbulence physics and in developing successful noise suppression procedures; and (3) the micromechanical characterization of nanocrystalline structures, with a particular focus on the evolution of the microstructure with deformation and temperature. The relevance to NASA is confirmed by the strength of the CeNNAs collaborations with the NASA Research Centers. CeNNAs maintains its targeted cohort of 20 students, who are working their way into the NASA-community workforce. The Center has had substantial success in acquiring leveraged funds, thereby building on the NASA investment. The Center also has begun more explicit participation in technology transfer through efforts at product development and direct industrial connections.

BENEFITS TO SOCIETY

The research on weakly ionized plasmas promises some hope for a reduction in the strength of the sonic boom associated with supersonic flight and, by a reduction in shock-wave drag losses, the possibility of economically feasible and commercially attractive flight at more than four times the speed of sound. The research on jet noise suppression may lead to quieter airplanes and to reduced separations for aircraft during takeoff and landing operations, thereby affording higher density and cheaper air traffic control modalities. The research on microcharacterizations may provide new fabrication schemes, which are focused on the correlation of targeted surfaces and their associated temperature and longevity requirements, with substantial savings in airframe manufacturing costs with no loss of airframe reliability.

STUDENT ACHIEVEMENTS

Students continue to play roles of central importance in CeNNAs research activities. This includes major responsibilities for the Center's advances in drag reduction from nonequilibrium processes and in the role of water in noise suppression. CeNNAs students continue to move purposefully into the aerospace workforce; alumni now study in Ph.D. programs from coast to coast and have taken positions in academia and in major aerospace companies (Hughes Aircraft, Boeing, and General Electric), as well as at NASA Field Installations.

Lead NASA Installation: Langley Research Center
Telephone: (904) 561-2471
Fax: (904) 561-2471
E-mail: johnsonj@cennas.nhmfl.gov
URL: http://www.cennas.nhmfl.gov/

Center for Aerospace Research (CAR)

Director: Dr. Frederick Ferguson
North Carolina A&T State University
Greensboro, North Carolina 27411
Date of Original Award: 1992

INTRODUCTION

The Center for Aerospace Research (CAR) conducts interdisciplinary research for the purpose of building engineering design tools that will lead to the effective development of the next generation of subsonic, supersonic, and hypersonic aircraft and spacecraft. Five research groups (Aerospace Structures, Human-Machine Systems Engineering, Computational Fluid Dynamics, Propulsion, and Controls and Guidance) focus on innovative research in their quest for new technologies with applications in spacecraft and high-speed aircraft design.

CAR is committed to educating and training socially and economically disadvantaged students and to enhancing opportunities for socially and economically disadvantaged faculty in the field of aerospace engineering technologies. North Carolina A&T State University is very supportive

of CAR's objectives, and the school has provided research facilities in its recently renovated Interdisciplinary Research Building, which is depicted in Figure 1.

Figure 1. Edward B. Fort Interdisciplinary Research Center (the home of CAR).

RESEARCH ACCOMPLISHMENTS

The Aerospace Structures research component of CAR has developed a nonlinear technique for modeling geometrically exact structures that accounts for large rotations, displacements, and strains, including three-dimensional stress effects.

In the field of Human-Machine Systems Engineering, CAR is conducting research to address how a human operator's flight characteristics affect the handling qualities of high-speed aircraft. The modeling of the human operator and his or her interactions with a complex system is the focus of this research. Studies were conducted in discrete and continuous (compensatory and pursuit, as well as stimulus-response compatibility) tasks, the effects of saccadic eye movement in visual information search, and the effects of induced motion changes during task performance on pilot workload. The preliminary research results showed that the compensatory gain time of the human operator is 0.75 ± 0.5 seconds, occurring with varying crossover frequencies and phase angles between 63° and 70°. The results also showed that human operators responded differently with varying signal pairs and the manner in which the stimulus-response signals were presented. It has been found that induced motion changes affect human workload and degrade performance. Based on these findings, a quantitative relationship among workload, task complexity, and system dynamics was obtained.

In Computational Fluid Dynamics, CAR research was focused on the following: the development of compressible dissipation turbulence models in high-speed flows, the implementation of a boundary layer wall function methodology, an experimental and computational investigation of air-breathing propulsion/airframe integration for waverider design, and the study of fluid/structure interactions and the flutter of high-speed vehicles. To date, the Center has developed an "eddy viscosity transport" model for turbulent flow that led to improved surface pressure, skin friction, and heat transfer characteristics prediction. Similar trends in the aerodynamic design characteristics have been obtained when this model was tested numerically in the solution of hypervelocity flow through a scramjet combustor for hypersonic vehicle propulsion.

In the area of Propulsion, the research efforts are mainly in two broad areas: airframe/engine integration involving multidisciplinary design and optimization and engine cycle analysis for high-speed civil transport (HSCT) and hypersonic vehicle configurations. In multidisciplinary design and optimization, the Propulsion group has developed methodologies for conducting sensitivity analysis and optimization. The results led to the development of a data base from which the functional behavior of the effects of aerodynamic parameters, such as Mach number variations on propulsion performance (I_{sp}), was determined. A preliminary analysis has led to the development of realistic analytical models for propulsion system design. A second application of multidisciplinary design and optimization is fluid/structure/propulsion/control interaction, which strongly affects the performance and handling characteristics of aircraft. The goal is to develop methodologies that will enhance the development of a design tool for constructing advanced aircraft configurations with optimized aerodynamic characteristics. This analysis approach allows for the development of high-fidelity models utilizing computational modules.

In the field of Controls and Guidance, new technologies in hybrid fuzzy proportional integral derivative (HFPID) controllers have been devel-

oped. The human response to changing HSCT flying characteristics has been studied and appropriate HFPID controllers have been developed. Patents on these inventions are pending. Applications of this technology include vibration suppression in high-speed aircraft, vibration control for flat plates, and vibration control for active surfaces in vertical/short takeoff and landing aircraft.

RELEVANCE TO NASA STRATEGIC ENTERPRISES

The technologies being developed at CAR are very important to the strategic interest and technological goals of the Aeronautics and Space Transportation Technology Enterprise of NASA. The Human-Machine Systems Engineering results have wide applications in ongoing NASA research computational models for human factors. The potential benefits of this research include a better understanding of the complex work domain and the impact on the human-automated system interface. CAR is in a very favorable position to develop an assessment tool for human performance in complex systems that include multimodal interface and group/team collaborative dynamics. Research in Computational Fluid Dynamics will enable an accurate prediction of the behavior and design of structures under adverse conditions, which will lead to the prevention of catastrophic failure. The results of research in Propulsion have potential applications in HSCT and hypersonic vehicle design. The overall outcome of CAR research efforts will enable the design of advanced controllers that will greatly enhance the stability and performance of high-speed aircraft.

STUDENT ACHIEVEMENTS

In 1997, CAR was instrumental in graduating more than 10 of its graduate students at the master's level with degrees in mechanical, electrical, and industrial engineering.

Lead NASA Installation: Langley Research Center
Telephone: (910) 334-7254
Fax: (910) 334-7397
E-mail: fferguso@ncat.edu
URL: http://www.ncat.edu/~nasacar/

Center for Autonomous Control Engineering

Director: Dr. Mo Jamshidi
University of New Mexico
Albuquerque, New Mexico 87131
Date of Original Award: 1995

Report not submitted.

Lead NASA Installation: Ames Research Center
Additional NASA Enterprise Areas: Human Exploration and Development of Space, Mission to Planet Earth, and Space Science
Telephone: (505) 277-5538
Fax: (505) 277-4681
E-mail: jamshidi@unm.edu
URL: http://ace.unm.edu/

Human Exploration and Development of Space

Center for Photonic Materials and Devices

Director: Dr. Enrique Silberman
Fisk University
Nashville, Tennessee 37208
Date of Original Award: 1992

INTRODUCTION

The Center for Photonic Materials and Devices aims at performing research and developing technologies relevant to NASA's mission, focusing on the field of photonics. Research in photonics has made possible the development of new technologies that have produced revolutionary changes in communications, computing, robotics, medicine, environmental control, and many industrial processes. In addition, the potential reputation of the Center will attract an increased number of disadvantaged students and will motivate them to pursue careers relevant to the NASA mission.

RESEARCH ACCOMPLISHMENTS

The Center has focused its research on one of the most promising branches of photonics—that of producing new materials and improving the production of known materials, which is the

initial stage of the development of the latest advanced technologies. One group uses recently developed nanotechnology methods to produce new materials that contain inclusions of single atoms, clusters of atoms, or molecules. These nanophase materials are starting to contribute to extraordinary advances in research, development, and industrial applications. The miniature quantum well laser, the cascade infrared laser, the quantum wire lasers, and the high bit-rate microcavity LED are a few devices that have emerged from quantum confinement effects in semiconductor materials. The three-dimensional confined metals and alloys are also found in many significant applications within industries.

The focus of this group has been on nanophase fabrication techniques and physical characterization. A series of new nanophase materials, including molecular clusters and metal colloid and semiconductor nanoparticles (also called quantum dots), has been fabricated. The recent significant findings were: (1) demonstrating that the homogeneous nucleation mechanism is responsible for a supercooled and physically confined molecular system in porous media; (2) illustrating that PbI_2 nanoclusters formed in solution are single-layered; (3) proposing a new model that can explain a long-standing observation of the surface plasmon resonance shift of metal colloids confined in a dielectric host depending on the annealing atmospheres and temperatures; (4) discovering surface phonon modes of m-v and II-VI nanocrystals in insulator hosts; and (5) obtaining the first scanning probe microscopic data suggesting that a dipole-induced dipole propagation is a universal model to describe interfacial interactions for a molecular system on a surface.

Another group is working to increase the knowledge of the properties/structure/processing relationship in wide-bandgap semiconductors and the way they affect device performance. In particular, the group is evaluating Earth- and microgravity-grown crystals, determining the relative contribution to defect incorporation, and studying room-temperature semiconductor detector physics by focusing on their optimization for space applications. The crystals are investigated for their defect content using optical microscopy to detect stress-induced birefringence, low-temperature photoluminescence to determine the presence of point defects, and ultrahigh vacuum spectroscopy to evaluate the chemical composition of the surface. This year, the group has developed a new surface passivation method involving the growth of a thin layer of oxide over the surface of the cadmium zinc telluride detectors that lead to higher sensitivity.

A third group is working with glasses and other optical materials, which could be used to make new laser sources and to develop compact systems for converting thermal energy to electrical energy. Some of the glasses being studied at Fisk can be used to make optical fiber lasers, which provide compact, rugged sources of near-infrared laser radiation. This group has produced and is continuing to develop a new glass that shows great promise as a fiber laser material. New glass-ceramic materials doped with rare-earth elements are also being developed for use as selective emitters in thermophotovoltaic energy systems. These materials, when heated, emit light in wavelength regions that can be efficiently utilized by solar cells; they can thus form part of a compact system that can convert heat energy into electrical energy.

Finally, a fourth group possesses the most modern equipment for studying the physical structure and chemical composition of solid surfaces. This enables measurements to be made up to the limit of locating single atoms and in environments from normal atmospheres to ultrahigh vacuum. This group has recently added an Ultra-High Vacuum Scanning Tunneling Microscope (UHV-STM) system to its facilities and has done significant studies on silicon carbon in collaboration with NASA's Lewis Research Center. The emphasis has been on studying how electrical properties change when diffusion and reactions occur in palladium-silicon carbon systems when ultrathin layers of palladium are deposited on silicon carbon.

The newly established Plasma Sciences Laboratory extended the research capabilities of the Center to include plasma processing and basic plasma physics studies. Two new faculty members were added to the Fisk physics department and received partial support through the Center to develop this research facility. The group built a

Graduate student Miguel Hayes measuring charge mobility in a CdZnTe radiation detector.

new highly flexible, multiple configuration plasma device that produces moderate-density, low-temperature plasmas using direct current glow discharge, thermionic filament, and, in the near future, radio frequency/microwave techniques. The preliminary experiments on plasma-materials interactions, in collaboration with the crystal growth group, have yielded very positive results.

RELEVANCE TO NASA STRATEGIC ENTERPRISES

The achievements in nanophase materials are indispensable for materials science, fluid physics, and protein crystal growth research in a microgravity environment. NASA has identified the work in wide-bandgap semiconductor detector technology as a promising technology for x-ray and gamma-ray astronomy. Materials developed from the work in glasses have wide application for space technology because of their potential use in compact, rugged, lightweight systems for light generation and energy conversion.

BENEFITS TO SOCIETY

Room-temperature detectors fabricated from semiconductor crystals have broad applications of clear benefit to society, such as the detection of breast cancer, brain and heart nuclear medical imaging, and the monitoring of nuclear waste and nuclear nonproliferation. Applications of materials developed from the work in glasses that could benefit the general public include compact, reliable laser systems to be used aboard civil aircraft for wind shear detection and thermal-to-electrical energy systems that can be used to provide electricity in remote areas. Plasma processing techniques are used widely in the industrial production of semiconductor and microelectronic devices and offer an economically and environmentally friendly approach to device fabrication when compared with chemical processing techniques.

STUDENT ACHIEVEMENTS

Graduate and undergraduate students from the physics, chemistry, and biology departments at Fisk are pursuing research in all components of the Center using state-of-the-art scientific facilities. During the 1996–97 Academic Year, 27 undergraduate students and 12 graduate students participated in the research activities. The highlight of our student training activities was the Summer Research Program, an intensive 9-week, full-time program of study and research, during which 16 undergraduate students (from 5 minority universities and 3 states; 11 females and 5 males) participated in the research activities of the Center. As a result of their summer experiences, all five of the seniors who participated in the program applied to and were accepted by Fisk University for graduate studies.

Graduate students Gregory Lampkin and Kent Wallace, undergraduate Darrell Hayes and Professor Ed Thomas taking measurements at the recently built Fisk Plasma Source.

Lead NASA Installation: Marshall Space Flight Center
Additional NASA Enterprise Area: Space Science
Telephone: (615) 329-8620
Fax: (615) 329-8634
E-mail: esilber@dubois.fisk.edu
URL: http://www.fisk.edu/nasa.html

Space Medicine and Life Sciences Research Center

Director: Dr. Myrtle Thierry-Palmer
Morehouse School of Medicine
Atlanta, Georgia 30310-1495
Date of Original Award: 1995

INTRODUCTION

NASA's Space Medicine and Life Sciences Research Center (SMLSRC) at the Morehouse School of Medicine has two primary goals. The first is to make significant findings in life sciences and biomedical research that are of relevance to the mission of NASA. The second is to increase the number of students and postdoctoral fellows trained in space medicine and life sciences who are embarking on careers in that area.

The SMLSRC is divided into three research teams composed of 11 faculty members: Cardiovascular, Musculoskeletal, and Cell Biology. The teams work on one to three research projects with a central research theme related to NASA interests. The Cardiovascular team examines hemodynamic responses of salt-sensitive rats and humans to simulated microgravity, using hind limb-suspended rats and the head-down bed-rest model for humans. The Musculoskeletal team is determining whether the drug clenbuterol may be used as a countermeasure for the muscle wasting and bone loss that is observed in rats under simulated microgravity conditions. The Cell Biology team examines differentiation, development, and function of vascular, skeletal, and neuronal cells and tissue in a NASA bioreactor, which simulates aspects of a microgravity environment.

RESEARCH ACCOMPLISHMENTS

Cardiovascular

Space flight results in reduced body fluid volume and reduced muscle and bone mass. Dietary salt is a contributing factor to the development of hypertension in individuals who are sensitive to salt. The Cardiovascular team has hypothesized that differences in salt sensitivity may explain some of the variations observed in the cardiovascular responses to microgravity during space flight. This hypothesis is being tested in salt-sensitive rats and humans. A major finding of the group is that salt-sensitive rats fed a high salt diet tend to resist a sustained reduction in blood pressure during simulated microgravity. The team has also demonstrated an inverse relationship between blood pressure and blood levels of 25-hydroxyvitamin D (a liver metabolite of vitamin D) when salt-sensitive rats are fed a high salt diet (Figure 2). The reduction in blood levels of 25-hydroxyvitamin D may be specific to salt-induced hypertension.

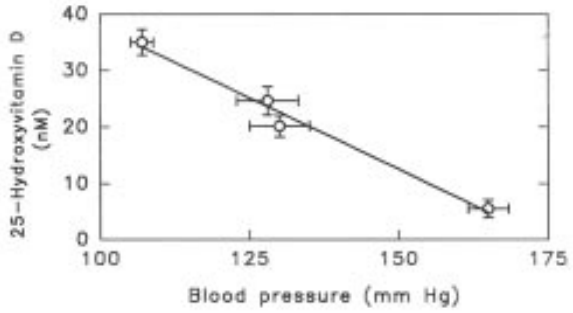

Figure 2. Inverse relationship between blood levels of 25-hydroxyvitamin D and blood pressure for salt-sensitive rats fed a high salt diet.

Musculoskeletal

The Musculoskeletal team is involved in a study to determine whether the drug clenbuterol can reduce the muscle wasting that occurs in space travel. Models for this study are hind limb-suspended rats. The ability of clenbuterol to prevent muscle wasting induced by simulated microgravity varied with muscle type.

Cell Biology

The Cell Biology team is using cells to answer questions that cannot be answered with the whole animal model. Endothelial and smooth muscle cells from blood vessels have been cultured in a slowly rotating bioreactor (simulated microgravity). These cells form three-dimensional aggregates with many of the same characteristics as that in the intact vessel. These aggregates will allow the team to focus on the function of vascular cells under simulated microgravity conditions. Experiments with bone tissue cultured in the bioreactor suggest that bone tissue may be more sensitive to simulated microgravity at the earliest developmental stages, resulting in the prevention or retardation of differentiation and mineralization.

RELEVANCE TO NASA STRATEGIC ENTERPRISES

These studies will assist in developing countermeasures for the cardiovascular changes and the bone loss and muscle wasting experienced by astronauts during space flight. The project on the relationship between salt sensitivity and simulated microgravity contributes information concerning the ability of salt-sensitive individuals to engage in space flight. Because the vitamin D endocrine system is involved with both the cardiovascular and skeletal systems, the altered vitamin D system of the salt-sensitive individual has implications with regard to cardiovascular function and bone loss during space travel.

BENEFITS TO SOCIETY

The SMLSRC is contributing information on salt-induced hypertension. There is the potential of blood levels of 25-hydroxyvitamin D being used to distinguish salt-induced hypertension from other forms. This would improve the treatment outcome for salt-induced hypertension. This project has particular relevance to the African-American population, because of the lower mean blood 25-hydroxyvitamin D level and higher rate of hypertension and salt sensitivity in that population compared with the white American population. The SMLSRC will also benefit society by providing information toward the treatment and prevention of skeletal problems such as osteoporosis and the bone loss and muscle wasting experienced by patients that must undergo extensive bed rest.

STUDENT ACHIEVEMENTS

The SMLSRC supported 7 graduate and 22 undergraduate students this year. One student received a second prize for a paper submitted to the 1997 University Research Centers Technical Conference. A second student won a first prize for an oral presentation at the 1997 Science Symposium at Morehouse College. The Center also supported a summer science program for 12 high school students. The Cleveland Clinic Foundation sponsored two students from Cleveland, Ohio.

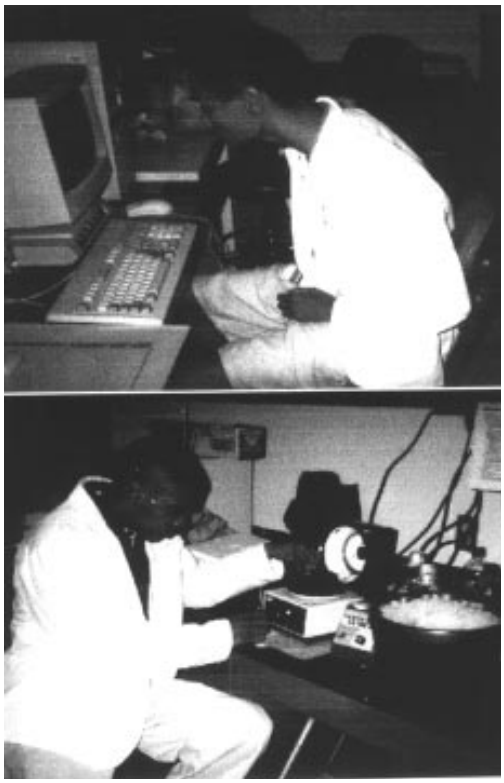

SMLSRC students at work in the laboratory.

Lead NASA Installation: Johnson Space Center
Telephone: (404) 752-1505
Fax: (404) 752-1978
E-mail: thierrm@link.msm.edu
URL: http://www.msm.edu

Center for Applied Radiation Research

Principal Investigator: Dr. Thomas N. Fogarty
Prairie View A&M University
Prairie View, TX 77446
Date of Original Award: 1995

INTRODUCTION

Prairie View A&M University Center for Applied Radiation Research (CARR) was established in 1995 to address missions and critical technologies of NASA. The mission of CARR is based on four components: research, human resource development, service, and commercialization and technology transfer. CARR conducts research in three technical areas: space environmental simulation, radiation effects on electronic and photonic systems, and radiation effects on biosystems. CARR is unique in that it addresses issues from the microscopic level, truly "systems-level" materials, complex integrated circuit systems, physiological studies at the cellular level, and the human reproductive and immune systems.

RESEARCH ACCOMPLISHMENTS

Process and Radiation-Induced Defects

We have continued to improve our measurement capabilities, which will allow a better understanding of defects at the interface between silicon and silicon dioxide. The quality and integrity of this interface govern the performance of most advanced integrated circuits, including those used in space applications. The space radiation environment can damage this interface and alter the point at which an electronic device becomes active in a particular application. Recent findings have lead to a better understanding of the two major types of radiation-induced interface defects. Research collaborators serving as CARR subcontractors at major universities have confirmed the results by independent measurement techniques.

Recently, CARR expanded its study of semiconductor dielectric interface to include ferroelectric materials, which increase the charge storage capacity of memory cells. This will allow higher density integrated circuit fabrication.

Radiation Testing and Single-Event Effects

High-energy particle accelerators are used to simulate cosmic rays, which cause soft (recoverable) errors in memory circuits called "single event upsets." CARR experiments have confirmed theoretical predictions that bring into question the usual assumptions on the angular dependence related to how much energy a cosmic ray deposits in the materials making up a unit of computer memory. These theoretical and experimental results influence tests for single-event effects.

CARR also expanded Cyclotron testing to include 55 MeV protons of semiconductor memory microprocessors. This is important for International Space Station (ISS) applications. Correlations with previous heavy ion tests are in progress. A CARR CEMDAS Fellow proposed a new model for multiple-bit soft errors that fits the data better than previous models.

CARR performed proton tests on optoelectronic parts intended for ISS internal data communication systems, in cooperation with Boeing's Defense and Space Group, and assessed the tolerance of the expected proton radiation environment.

CARR also developed a portable single-event upset test bed with modular architecture that will be used to perform *in situ* testing in the upper atmospheres.

Circuit Innovations

Circuit simulations indicate that the switched capacitor SRAM is an attractive alternative to standard resistively hardened, six-transistor SRAM. The first version of the switched capacitor hardened memory circuit has been designed and fabricated. Tests indicated that the design methodology prevents radiation-induced latchup. Another version of the hardened memory is being designed to provide fast read/write access and better control of the "hardness" of the switched capacitor memory cell.

Emerging Technologies

CARR embarked upon projects in new materials and quantum devices that have the potential for

revolutionizing space technology. This work has attracted mainstream support and major university research collaborators. These materials are promising for efficient solar cells, power electronics, and radiation-tolerant electronics. CARR is also interested in the radiation effects of future generations of quantum electronic devices that may be used in space. Furthermore, CARR has performed preliminary gamma radiation tests on resonant tunnel diodes in cooperation with collaborators at Texas A&M University. These and related quantum devices have the potential to revolutionize space technology. This represents the first such studies on these devices. CARR also initiated research on a novel material for use as a substrate for gallium nitride films. Gallium nitride is an optoelectronic material used for blue light emitting diodes and lasers. These technologies are currently limited by the absence of lattice-matched substrate materials.

Life Science

CARR work in the life sciences has identified a common end point that will help establish a fingerprint of radiation-involved damage to cells related to reproduction in cell culture.

RELEVANCE TO NASA STRATEGIC ENTERPRISES

Understanding radiation effects on materials and avionics will provide safer and more reliable operation of systems aboard the Space Shuttle, the ISS, and future manned spacecraft to Mars. Studies of radiation effects on immune and reproductive systems help make longer duration space flights safer and more practical for both men and women. Avionics for future high-speed civil transports (HSCT) will need higher radiation tolerance than current avionics because of the higher operating altitude. HSCT crews will be subject to higher radiation levels than current airline crews. New portable test bed results will be applicable to any future Space Shuttle replacement. Emerging technologies will make exploring the solar system cheaper and more reliable by making deep space probes smaller and more radiation tolerant.

BENEFITS TO SOCIETY

The fast-paced trend in microelectronics fabrication is toward smaller, more densely packed devices. This may make even the next generation of integrated circuits susceptible to radiation from space on Earth, with the consequence that the average laptop user may experience single-event effects. Industrial research is beginning to address these issues, as well as the effects of radiation used in the convergence of the needs of terrestrial and space technology. Preliminary results from a CARR Delphi Forecast show agreement in converging needs of commercial integrated circuits and space avionics, but differing viewpoints in meeting these needs.

STUDENT ACHIEVEMENTS

CARR has supported 8 graduate and 26 undergraduate students during this reporting period. Several of these students have graduated and gone on to graduate school or employment in the avionics or commercial electronics industry. CARR has have also extended internships to minority students and faculty. CARR is part of the Texas A&M University System partnership with Texas independent school districts to facilitate K–16 student achievement, and it is a contributor to the Texas Space Grant Consortium.

Lead NASA Installation: Johnson Space Center
Additional NASA Enterprise Areas: Aeronautics and Space Transportation Technology and Space Science
Telephone: (409) 857-4606
Fax: (409) 857-4608
E-mail: tfogarty@pvcea.pvamu.edu
URL: http://www.carr.pvamu.edu/

Center for Food and Environmental Systems for Human Exploration of Space

Director: Dr. Walter A. Hill
Tuskegee University
Tuskegee, Alabama 36088
Date of Original Award: 1992

INTRODUCTION

This Center's research focuses on the development and refinement of information, technology, and systems for the production, processing, and use of sweet potato and peanut biomass that meet the design plans of NASA's Advanced Life Support program and the NASA Human Exploration and Development of Space Enterprise. The roots, nuts, and leaves of these two crops can be processed into a variety of foods and their nonedible resources recycled as part of an integrated food and environmental system for human life support in space.

Teresa Walker (right), a Tuskegee University junior Chemistry major, analyzes a hydroponic nutrient solution using the Dionex Ion Chromagraphy unit under the supervision of Jill Hill

RESEARCH ACCOMPLISHMENTS

The Crop Production and Environmental Systems Research Unit emphasized sweet potato and peanut nutrition, environmental/physiological factors, and cultural practices during this year. Findings from a study comparing peanut growth in enriched carbon dioxide (CO_2) environments with ambient conditions indicate that peanut response varied with the plant part, the foliage yield declined, and the pod and seed yield and harvest index increased with CO_2 enrichment. Photoperiod/temperature interaction studies show that both factors tended to affect peanut growth independently. The photoperiods studied included 12 hours and 24 hours of continuous light; the temperatures studied included a constant 28° C and a diurnal temperature (day/night) of 28/22° C. The results indicate that peanuts can be grown under continuous light if the diurnal temperature is provided. However, temperature does not seem to exert a major impact at a shorter photoperiod.

To date, the highest seed yield of peanuts has come from a relative humidity study. The total peanut seed yield averaged 545 grams per square meter at 85-percent relative humidity compared to 400 grams per square meter at 50-percent relative humidity. In biocompatibility studies of the two crops grown with a common substrate, intercropping did not influence the growth response of sweet potato, while peanut yields were significantly reduced. The results from a study comparing protocols for sweet potato production used at the Kennedy Space Center and Tuskegee University showed that storage root yield was similar between protocols. However, foliage production, storage root numbers, and length/diameter ratio were higher with the Kennedy Space Center protocol, partly because of the higher initial nitrate concentration in the solution.

Kamau Crawford, a junior majoring in environmental science, examines Tuskegee University bioreactors, which were similar to those at KSC where he worked as a 1997 summer intern.

The Food Technology and Utilization Research Unit has been developing sweet potato and peanut recipes for Advanced Life Support program menus as well as processing technologies. Unit members have been studying oil extraction

techniques for peanuts using a water-based method. The preliminary studies demonstrated that the oil obtained compares favorably to commercially available peanut oil. Extraction of up to 80 percent has been achieved. They have conducted a sensory evaluation of peanut recipes for bread, pancakes, pretzels, soup, and custard. Although several recipes are being revised, all recipes were rated "like slightly" or higher. The development of a sweetener from sweet potatoes continues through the use of enzymatic and acid hydrolysis methods. Nutrition information on 76 recipes using sweet potato, peanut, and soybean products has been recorded using Nutritionist IV software. This unit has also completed preliminary studies on the use of sweet potato leaves, stems, and fibrous roots as well as peanut shells to develop a biodegradable paper product for possible use in packaging or toweling and as a medium for seed germination. In addition, successful preliminary investigations may lead to the development of another type of packaging/moisture barrier using the residue from peanut oil extraction.

The Germplasm Development and Improvement Research Unit has two subgroups; one uses conventional breeding and the other uses the genetic engineering of plants. The conventional breeding team has been screening plants in the greenhouse, the environmental growth room, and field studies for the short stature required for the Advanced Life Support program. From preliminary analysis, four semidwarf lines that have short internode length and limited branching and vine spread have been identified. Two breeding lines are being considered for study by the Crop Production and Environmental Systems Research Unit after preliminary tests indicated good yields using the nutrient film technique.

The biotechnology team in the unit continues its effort to improve the nutritional quality of sweet potatoes and peanuts, especially the amino acid profile. This team has developed an in-vitro regeneration system for sweet potato cultivars commonly used at Tuskegee University or in the South. Storage roots from transgenic sweet potato plants that have already been verified for expression of the *asp-1* gene were independently analyzed for their amino acid profiles. The results indicated a fivefold increase in protein level as well as increases in essential amino acids. The leaves are currently undergoing the same analysis. The results are being compared with control plants in the field to determine whether yield or rate of achieving yield has changed in this development process. This team has also developed transgenic peanut plants expressing the *asp-1* gene. Genetically transformed peanuts are currently being grown in the greenhouse for observation and comparison with control plants.

Hurann Walton adds sulfuric acid to Kjeldahl Digestion Unit at Tuskegee University Environmental Systems Laboratory.

The Waste Management and Resource Recycling Research Unit engages in research activities related to bioregenerative approaches to reducing or reusing waste. The research pursuits involve the use of single and mixed culture inocula (soil bacterial isolates) for the aerobic degradation of inedible and excess harvest biomass. This unit has characterized the effluent from aerobic biodegradation of sweet potato biomass and is presently characterizing effluent from aerobic, continuously stirred biodegradation of wheat biomass. The unit has also determined the chemical composition of peanuts and sweet potatoes grown in an effluent-amended nutrient solution. Preliminary methodologies associated with using electrophoretic analysis as a means of quality control in an aerobic bioreactor system are under way. When peanuts were grown in growth chambers with effluent from a bioreactor incorporated in the nutrient growing medium, Georgia Red peanut plants were found to be tolerant to

aerobic bioreactor effluent as a source of nutrients. Incorporating the effluent at ratios of as high as 60 percent and higher into a modified half Hoagland nutrient solution did not adversely affect Georgia Red peanut foliar growth. The response of sweet potatoes to the incorporation of effluent in the crop growth medium was cultivar dependent.

STUDENT ACHIEVEMENTS

Carla Wilson, a second-year food science graduate student, conducted a 2-week sensory evaluation of sweet potato products at Johnson Space Center as part of her master of science thesis. Rochell McConnell, a senior in food and nutritional science, spent the summer as an intern with the Food and Nutrition Service of U.S. Department of Agriculture in Alexandria, Virginia. Kamau Crawford, Wytausha Almon, and Teresa Wellmaker, juniors in environmental science, biology, and chemistry, respectively, spent 10 weeks as interns at Kennedy Space Center. Geralda Parvilus, a senior in animal science now pursuing a master of science in environmental science, spent the summer at the Cold Springs Harbor Laboratory in New York.

Food and nutritional sciences major Rochell McConnell presents sweetpotato and peanut products developed at Tuskegee University for future long-term human space missions.

Lead NASA Installation: Johnson Space Center
Telephone: (334) 727-8157
Fax: (334) 727-8493
E-mail: hillwa@acd.tusk.edu
URL: http://agriculture.tusk.edu/

Mission to Planet Earth

Center for Hydrology, Soil Climatology and Remote Sensing

Director: Dr. Tommy L. Coleman
Alabama A&M University
Normal, Alabama 35762
Date of Original Award: 1995

INTRODUCTION

The initial research thrust of the Center for Hydrology, Soil Climatology and Remote Sensing (HSCaRS) is to develop a comprehensive research program investigating hydrologic processes, with emphasis on remote-sensing measurements and modeling of soil moisture. The objectives are threefold: (1) to develop a measurement/modeling strategy from low-resolution microwave data to derive soil moisture profile information and to determine its variability on a range of spatial scales; (2) to develop a precise, inexpensive, *in situ* technique for measuring soil moisture to facilitate the ground truthing of remotely sensed data and the validation of global and regional climate change models; and (3) to take knowledge from hydrologic modeling, coupled with evolutionary computing techniques, to model and visualize soil moisture, soil erosion, and contaminant transport through soils and within water bodies.

RESEARCH ACCOMPLISHMENTS

The Center's research efforts are grouped into four major areas: Hydrology/Hydrologic Modeling, Sensor Development, Evolutionary Computing, and Remote Sensing/GIS. Several projects were initiated in these subject areas during 1996, which continued through 1997 and produced several publications and presentations.

Hydrology/Hydrologic Modeling

Our scientists have been involved in plot-scale and regional watershed modeling of soil moisture for the past 2 years. The plot-scale studies conducted at the HSCaRS research test bed afforded Center scientists an opportunity to define the soil depth emitting and reflecting energy at various

microwave wavelengths, to characterize temporal and spatial variability of surface soil moisture, to study the capability of measuring soil moisture at different frequencies, and to model soil moisture using microwave brightness temperature data (Figure 3). These studies have confirmed that the depth to which microwaves penetrate soils depends on the upper soil water content and the waveband used. The C-band penetrates approximately 3 centimeters (cm), the S-band approximately 5 cm, and the L-band approximately 10 cm. The estimation of soil moisture using microwave brightness data is affected by the amount and type of vegetation cover that is present and by soil spatial variability.

Figure 3. Collecting microwave radiometric data from HSCaRS research test bed.

In the area of watershed modeling, HSCaRS scientists have developed a point-scale soil hydrology model that assimilates microwave remote-sensing soil moisture estimates. When used with simple hydrology models or coupled with advanced hydrology models, the point-scale soil hydrology model increases the accuracy of estimating the status of soil moisture within the profile. HSCaRS scientists are currently working to couple sediment routing subroutines with SHEELS and DRUM in the development of a local and regional hydrology model to monitor soil.

Sensor Development

HSCaRS scientists have fabricated and tested in the laboratory two portable devices that are capable of estimating soil moisture to within ± 1 percent at a projected cost of less than $100. One of the devices uses infrared reflectance and Raman scattering techniques and is capable of measuring surface and subsurface profile soil moisture. The other device is an optical sensor that is based on the total internal reflection of light. Both sensors will be field tested during the fall of 1997 and the spring of 1998 (Figures 4 and 5).

Figure 4. Dr. B. Reddy and SEP student testing the infrared reflective portable soil moisture sensor.

Evolutionary Computing

HSCaRS scientists have developed a microwave temperature (T_B) algorithm for estimating soil profile water states in the upper 10 cm and lower soil depths. The microwave T_B is estimated from the dielectric constant (k) as a function of the amount of water remaining in the soil during drainage. When tested under laboratory conditions, the predictability of the algorithm decreased as the soil moisture content decreased to that of field capacity. Further testing will occur during HSCaRS 1998 summer field experiments.

Figure 5. Dr. A. Sharma and SEP student testing a portable optical soil moisture sensor.

Figure 6. SEP students performing image processing analyses on Sun workstations.

Remote Sensing/GIS

Using a Coosa River watershed as a test site, HSCaRS scientists have shown that runoff estimates and soil loss from watersheds can be effectively monitored when coupling basic remote-sensing processing techniques with geographic information system (GIS) software and a basic hydrologic and sediment transport model (CREAMS). This method permits the identification of land-use systems, which will minimize erosion and soil loss, decrease runoff, and decrease the pollution of streams and ground water (Figure 6).

Educational Outreach

During this past summer, 18 undergraduate students from around the United States participated in the HSCaRS Summer Enrichment Program (SEP). The students worked with mentors from Alabama A&M University and the Center for Global Hydrology and Climate Change, both located in Huntsville, Alabama, for a total of 8 weeks. Each student prepared a research paper from work assigned by his or her mentors. These papers will be presented by the students at the Second Annual NASA University Research Centers Technical Conference, February 23–26, 1998, in Huntsville, Alabama (Figure 7).

RELEVANCE TO NASA STRATEGIC ENTERPRISES

The research and educational outreach activities of HSCaRS are well grounded in the Strategic Plan of NASA's Mission to Planet Earth (MTPE). The overall goals of HSCaRS fit within three of the stated goals of MTPE. Furthermore, under long-term measurements for global change research, MTPE is committed to providing a specific series of 24 prioritized scientific measurement areas for a 15-year term. The research occurring in HSCaRS falls within six of these areas four under the broad heading of land measurements and two under the heading of atmosphere. Finally, the research and outreach activities of HSCaRS are also relevant to two of the revised goals of MTPE, which are to "expand scientific knowledge of the Earth system using the unique vantage point of space" and to "disseminate information about the Earth system."

BENEFITS TO SOCIETY

The research activities being conducted at HSCaRS will enable the average citizen to better understand hydrology and the role of soil moisture in our ecological system.

Lead NASA Installation: Marshall Space Flight Center
Telephone: (205) 851-5075
Fax: (205) 851-5076
E-mail: tcoleman@asnaam.aamu.edu
URL: http://hscars1.saes.aamu.edu/

Figure 7. Group photograph of the 1997 SEP students after closing luncheon.

Research Center for Optical Physics

Director: Dr. Doyle Temple
Hampton University
Hampton, Virginia 23668
Date of Original Award: 1992

Report not submitted.

Lead NASA Installation: Langley Research Center
Additional NASA Enterprise Area: Aeronautics and Space Transportation Technology
Telephone: (804) 728-6908
Fax: (804) 728-6910
E-mail: dtemple@gprc.hamptonu.edu
URL: http://www.cs.hamptonnu.edu/

Center for the Study of Terrestrial and Extraterrestrial Atmospheres

Director: Dr. Arthur N. Thorpe
Howard University
Washington, D.C. 20059
Date of Original Award: 1992

INTRODUCTION

The strategic focus of the Center for the Study of Terrestrial and Extraterrestrial Atmospheres (CSTEA) is to establish at Howard University a self-supporting, world-class facility for the study of terrestrial and extraterrestrial atmospheres. Special emphasis is placed on the training of socially and economically disadvantaged students in aerospace-based sciences and engineering.

RESEARCH ACCOMPLISHMENTS

The Laboratories for Experimental Research and Field-Related Research have collaborated in studying the role of convective processes over the Zaire-Congo basin in the Southern Hemisphere ozone maximum. This work, published in the Journal of Geophysical Research, elucidates the key factors responsible for the development, climatology, and location of the Southern Hemisphere tropical ozone maximum. The relative influences of lightning, biomass burning, cross-Atlantic transport, and natural sources are compared using model simulations and recent field experimental data.

Using *ab initio* methods, the Photochemistry of Atmospheres group has studied the reaction of $HOCl+HCl \longrightarrow C_{12}+H_2O$ in the presence of a chlorine anion, Cl^-. Cl^- is found to catalyze the reaction via the formation of intermediate ion-molecule complexes or by interacting with a concerted four-center transition state of the reaction.

The Flight Experiment group has completed the recertification flight of the Quartz Crystal Microbalancing instrument using new flight procedures. On this very successful flight, the instrument performed perfectly and collected some aerosol samples containing copper and zinc, which seem to come from sources that have not been identified at the present time.

While studying the solar cycle variation of nitric oxide using the data obtained by the Halogen Occultation Experiment on the Upper Atmosphere Research Satellite from 1991 to 1996, CSTEA's Remote Sensing group found that low-altitude nitrogen oxide (NO) increased steadily while solar activity decreased. High-altitude NO and the N_2O data decreased as expected. The unexpected increase of the low-altitude NO data was found to be caused by an erroneous instrument correction made by mission scientists.

RELEVANCE TO NASA STRATEGIC ENTERPRISES

The lead Strategic Enterprise for this Center is Mission to Planet Earth (MTPE). The cornerstone of MTPE is the Earth Observing System (EOS). Several other research projects at CSTEA involve studies in aeronautics and space sciences.

BENEFITS TO SOCIETY

The Center's major benefit to society is the training of a pool of highly qualified individuals who will diversify the Nation's workforce.

STUDENT ACHIEVEMENTS

For the Center to continue its growth and development, a critical component continues to be the students. As of January 1, 1997, there were 16 graduate and 17 undergraduate students participating in CSTEA-related research. For the fall semester (beginning August 25, 1997), CSTEA is supporting 15 graduate and 10 undergraduate students. Each CSTEA student is assigned to a Principal Investigator or an Associate Principal Investigator.

In addition to participating in the research aspect of the Center, students also gave presentations, were coauthors on papers published in refereed journals, and were introduced to a diversified group of scientists through seminars. Several students were also given the opportunity to visit the National Center for Atmospheric Research (NCAR) in Boulder, Colorado. CSTEA-sponsored seminars, given by prominent atmospheric scientists, are still a part of the CSTEA research and training program and will continue throughout the grant period, with prominent scientific investigators in atmospheric and related sciences as speakers.

Student productivity for this reporting period is as follows: eight student presentations were given at conferences; five students coauthored papers (three published and two under review); six B.S. degrees, four M.S. degrees, and two Ph.D.'s were given; two B.S. and three M.S. graduates are continuing for the next degree; and one graduate is employed in a NASA-related field.

The Howard University Program in Atmospheric Sciences (HUPAS)—a graduate Ph.D. and M.S. program—was approved by the Board of Trustees in May 1997. The full core curriculum has been accepted, and there is one student pursuing a master's degree in the program. Two adjunct faculty, one from the National Oceanic and Atmospheric Administration (NOAA) and one from NASA's Goddard Space Flight Center, have joined the HUPAS faculty in the Department of Physics. The graduate courses have been quite successful based on enrollment and cross-departmental interest. More rigorous efforts must be made to recruit junior faculty for this program and for infrastructural support, including a secretary, journal subscriptions, and a library.

CSTEA initiated a partnership for education and research with five HBCU's: Grambling State University, Lincoln University, Jackson State University, Savannah State University, and Virginia State University. The goals of this partnership, known as the CSTEA HBCU Academic and Research Consortium (CHARC), are to increase the number and quality of students from traditionally underrepresented groups pursuing terminal degrees in atmospheric sciences and related fields, to provide Howard University with a pool of students pursuing terminal degrees, and to encourage participation between NASA-related research and HBCU's. The CHARC program began in the summer of 1997.

Lead NASA Installation: Goddard Space Flight Center
Additional NASA Enterprise Areas: Aeronautics and Space Transportation Technology, and Space Science
Telephone: (202) 806-5172
Fax: (202) 806-4430
E-mail: thorpe@cstea.howard.edu
URL: http://www.cstea.howard.edu/

Tropical Center for Earth and Space Studies

Director: Dr. Rafael Fernández-Sein
University of Puerto Rico at Mayagüez
Mayagüez, Puerto Rico 00681-5000
Date of Original Award: 1995

INTRODUCTION

The Tropical Center for Earth and Space Studies (TCESS) at the University of Puerto Rico at Mayagüez comprises a multidisciplinary effort in several components relevant to NASA's Mission to Planet Earth (MTPE).

RESEARCH ACCOMPLISHMENTS

The Space Information Laboratory (SIL) receives data from satellites and makes them available to the user components within TCESS. The SIL now has a postdoctoral research associate who will be developing coastal and marine studies using the data from this station. An antenna capable of receiving Synthetic Aperture Radar and Landsat 7 data will be installed and commissioned during 1997. The SIL has contracted with Johns Hopkins University's Far Ultraviolet Spectroscopic Explorer project to serve as that project's primary ground station for receiving as well as tasking the satellite.

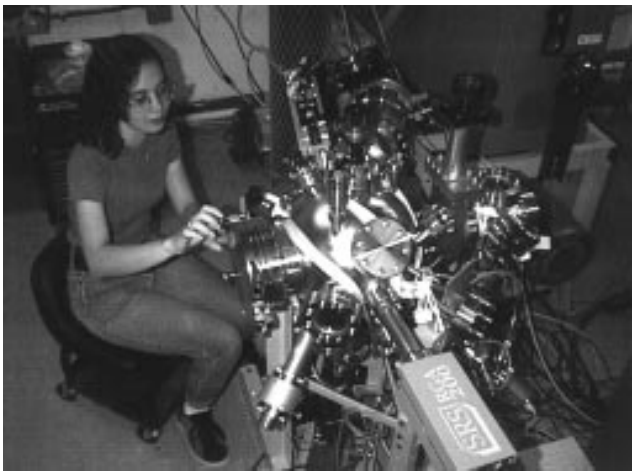

Graduate student, Lymari Castro, is adjusting the chamber for deposition of nitride thin films for her studies. She is part of the SMESA component of TCESS.

The UV Radiation Effects component's research objective is to monitor ultraviolet (UV) radiation effects on terrestrial and marine ecosystems using field and remotely sensed data. A UV monitoring station has been established in La Parguera, Puerto Rico. Intensive field experiments were conducted this summer on the effects of UV radiation on seagrasses, mangroves, and corals. Seasonal ozone variations in Puerto Rico show minimum values between November and the end of February. A high-performance liquid chromatograph (HPLC) was purchased and is being used for pigment separation and identification in mangroves, seagrasses, and corals. HPLC protocols for flavonoids in mangroves and seagrasses have been established. The variation in protective pigments in corals has been established for three species at various depths.

The Crustal Deformations of the Lesser Antillean Arc component focuses its research on the interaction of the Caribbean and North American plates along the Lesser Antilles island arc, a series of islands composed of 14 active or potentially active volcanic centers. Two graduate students have now completed the last two field campaigns and initial data processing. These efforts focus on the ongoing eruption of the Soufriere Hills volcano in Montserrat, British West Indies, which began on July 18, 1995, and continues today. The results so far have shown that global positioning system (GPS) geodesy can be used for cost-effective and timely hazards assessment of explosive island arc volcanoes and that the observed surface deformation is consistent with an elastic response of the volcanic edifice as indicated by numerical models. It has also been found that previously unrecognized eruptions occur in the Soufriere Hills stratigraphic record, that observed pyroelastic flows at Montserrat were largely the result of gravitational dome collapse (whose flow paths can be modeled quantitatively), and that the regional tectonic network framework exerts strong controls on eruptive style and dynamics.

The Advanced Automated Image Analysis components research is focused on the development of algorithms for signal and image processing applications of remotely sensed data. During the past year, the component has developed a research group in the area of hyperspectral image processing. The research initiated in this group

has developed prototype algorithms for the application of subset selection techniques to the area on hyperspectral data lossy compression and band selection. Current work in hyperspectral data analysis includes classification and lossless compression using nonlinear algorithms based on spatial and spectral information.

The Semiconductor Materials and Electronics for Space Applications (SMESA) component concentrates its research efforts on developing and studying novel materials with the potential for use in devices, particularly sensors, but also in other applications, such as solid-state lasers and displays. One of the materials classes studied is that of wide-bandgap nitride semiconductors. Thin films of gallium nitride and aluminum nitride, for example, are of interest for developing efficient blue-to-UV sensors and diode lasers. Researchers in this component are fabricating thin films of these materials by physical vapor deposition techniques. They have succeeded in growing aluminum nitride thin films at relatively low temperatures, which is desirable for both technical and economic reasons. Other semiconductors being studied include II to VI compounds with bandgap in the infrared-to-visible region. In particular, these materials are being prepared and investigated in nanocrystalline form, which can enhance some of the properties of interest for sensor applications. Extensive spectroscopic and structural studies of II to VI semiconductor compounds were performed. The methodology has proven to be sensitive and precise for observing quantum confinement effects in cadmium-selenium nanocrystals.

Luminescent materials are of interest for sensors and display devices. New materials with high luminescence intensity and high persistence times have been developed by researchers in this component, and work proceeds in this area. Another area is that of relaxor perovskites, such as $Pb(Mg_{1/3}Nb_{2/3})O_3$ (PMN), which have large property coefficients in a wide temperature range. Different from ideal perovskites, these materials can include nanoscale volumes of the oriented structure. Thin films and nanoparticles of these relaxors are attracting interest as possible sensor materials, as well as for other applications. Recent achievements include the first study of transition dynamics of relaxor ferroelectrics with ordered nanoregions.

RELEVANCE TO NASA STRATEGIC ENTERPRISES

The above UV research complements NASA's studies of stratospheric ozone depletion by relating data from the Total Ozone Mapping Spectrometer (TOMS) to surface UV irradiance measurements from the TCESS permanent monitoring station. Stratospheric ozone depletions and the corresponding increases in surface UV radiation are important components of NASA's MTPE Enterprise. Power processing electronics working at low temperatures are being developed as part of the work of the SMESA component. These will contribute to minimizing spacecraft launch weight and bulk by reducing the need for radioisotope thermoelectric generators and heating units, which are used to keep electronics warm in deep space. These low-temperature electronics can also be useful in other very cold environments.

Graduate student, Fasto Perez, is studying the behavior of electrical circuits in very low temperatures. He is immersing an electronic circuit in liquid hydrogen.

BENEFITS TO SOCIETY

Increases in UV radiation can have important health implications. The experiments on seagrasses and mangroves carried out at the University of Puerto Rico at Mayagüez's La Parguera site dramatically show the effects of UV radiation by comparing fully exposed samples to samples protected by sheets of UV filters. Experiments also show that pigments produced by these plants can be excellent UV protectants. The raw and processed (UV index) data from the UV monitoring station will be readily available through the Internet to any researcher, health official, or student.

Image Processing activities at the Advanced Automated Image Analysis component of TCESS.

STUDENT ACHIEVEMENTS

Current work in the area of image compression includes the development and code implementation of lossy and lossless compression algorithms. Students have worked on updating software, developing algorithms, and compiling and studying imagery. They also have presented papers at conferences. The research efforts of the SMESA component during the 1996-97 fiscal year is evidenced in a record of 40 published or accepted papers in scientific journals and 33 presentations at national or international conferences. A group of 23 graduate and undergraduate students participated in the research activity conducted by SMESA researchers.

GLOBE teachers/trainees learning about GPS.

Lead NASA Installation:
Goddard Space Flight Center
Additional NASA Enterprise Area: Space Science
Telephone: (787) 834-7620, ext. 2264
Fax: (787) 832-2485
E-mail: rafaelf@exodo.upr.clu.edu
URL: http://exodo.upr.clu.edu/~tcess/

Pan American Center for Earth and Environmental Studies

Director: Dr. Scott A. Starks
University of Texas at El Paso
El Paso, Texas 79968
Date of Original Award: 1995

INTRODUCTION

The Pan American Center for Earth and Environmental Studies (PACES), formed in 1995 as a NASA URC on the campus of the University of Texas at El Paso (UTEP), has a mission with the dual goals of contributing research to support NASA's MTPE Enterprise and contributing to the education of the next generation of scientists and engineers, many of whom are underrepresented minorities. During its second year of operation, PACES became a fully functional center while undertaking a variety of research and outreach activities.

RESEARCH ACCOMPLISHMENTS

Intensive computational facilities required for remote sensing and GIS applications were acquired and installed. Significant geophysical and

geological remote-sensing and environmental information generated by NASA and other agencies has been assembled for the southwestern United States and northern Mexico. This information is being disseminated on a regular basis.

In addition, PACES was able to open the Student Learning Center and International Remote Sensing Applications Training Center. Equipped with personal computers set up to support image processing, GIS projects, and networked collaborative projects, this facility is used to teach periodic training courses in the areas of remote sensing and GIS to the UTEP community.

A memorandum of understanding was prepared that links PACES, NASA's MTPE, the Earth Data Analysis Center of the University of New Mexico, Instituto Technologico de Estudios Superiores de Monterrey, and the Transboundary Resource Inventory Program (TRIP) in efforts to better understand the distribution and composition of haze in the lower troposphere in the Texas-Mexico border region. The objective of this collaborative effort is to determine the source(s) and meteorological conditions that promote the development and distribution of the haze and to document its historic development in the border region of Texas.

SequenceL, the high-level executable computer language being developed at PACES, shows promise as a data-mining platform. The denotational semantics of SequenceL were revised in 1996 and now incorporate features to enhance its data-mining capabilities. Extensions of SequenceL are being explored for the enforcement of integrity constraints, and a prototype visual interface for the language has been developed. In addition, a proof that SequenceL is equivalent to a Universal Turing Machine was recently completed, thus providing the assurance that SequenceL provides features that are rich enough to solve any solvable problem. A collaborative project with David Dampier of the Army Research Laboratory at the Georgia Institute of Technology is proposed to apply recent results in Slicing/Merging Theory to SequenceL.

RELEVANCE TO NASA STRATEGIC ENTERPRISES

PACES is conducting research in a region extending from the Sierra Nevadas across Death Valley to Lake Mead and onto the Colorado Plateau. The Death Valley area is of great interest to PACES collaborators at the Jet Propulsion Laboratory and Caltech, and a comprehensive mosaic that crosses this area is being prepared and combined with digital terrain model data. Researchers are also focusing on the area of the Valles Caldera, on whose slopes rests the Los Alamos National Laboratory. In this study, PACES is working with Los Alamos colleagues to understand the evolution of this volcano and the risk posed by the laboratory's proximity to the volcano.

BENEFITS TO SOCIETY

In an area where water is scarce, PACES researchers are actively engaged in studies that use gravity data, topography, and satellite imagery to determine the current extent of water resources in El Paso-Ciudad Juarez. Satellite imagery is being studied to develop models describing the extent of urban change for the El Paso-Ciudad Juarez area and other metropolitan areas. In addition, PACES is investigating the effects on crops irrigated by Aguas Negras in the area of Ciudad Chihuahua, Mexico.

The research of PACES in environmental science and engineering has broad implications for improving the life of citizens of both the United States and Mexico. New initiatives are being directed toward modeling the dispersion of health-related atmospheric and water pollutants that often cross international and state boundaries. Remotely sensed data from satellites are a powerful way to assess the impact of all these factors, and remote sensing provides a natural framework for the study of problems shared by multiple states and countries. A border-area regional airshed model is being developed as the pilot project for a continental airshed model. This model will emphasize the transpiration and dispersion of health-related atmospheric pollutants on a continental scale.

PACES is also working with the Integrated Training Area Management program at Fort Bliss to assess the long-term impact of armed forces field

maneuvers on natural resources. PACES is designing a GIS and supporting data base that archives and consolidates data from natural, cultural, and environmental resources.

Based in part on its earlier success with the PACES Summer Science TREK, PACES has initiated a new outreach program, called In-School Scouting, that targets second- and third-grade students considered to be at risk for educational failure. PACES staff have also been actively engaged in Expanding Your Horizons, an outreach program targeting middle school girls, and the UTEP Engineering and Science EXPO, an annual outreach activity that typically attracts more than 1,000 precollege students to the UTEP campus. The goal of these efforts is to increase the number of historically underrepresented minorities working in the scientific community.

STUDENT ACHIEVEMENTS

During its second year of operation, PACES provided financial support for 24 undergraduates, 11 masterís students, and 6 doctoral students in its research activities. Of the nine undergraduates who graduated, five accepted positions with NASA-related employers, and the remainder elected to continue their studies in graduate school. Each of the four masterís and doctoral graduates accepted positions with NASA-related employers.

In addition to those students who received direct funding, PACES provided laboratory facilities that supported other research on campus. More than 50 students, drawn from the departments of civil engineering, computer science, geological sciences, environmental science and engineering, electrical and computer engineering, mechanical and industrial engineering, metallurgical and materials engineering, archeology, and biology, benefited through the use of PACES facilities. One of these students received a GEM fellowship to pursue his masterís as a result of work on a project aligned with PACES.

Forty-two students from UTEP gave at least one presentation at a technical conference, and many of them presented several papers. PACES students had a significant presence at the NASA University Research Centers Technical Conference hosted by the University of New Mexico in February.

Telephone: (915) 747-6873
Fax: (915) 747-7876
E-mail: sstarks@utep.edu
URL: http://paces.geo.utep.edu/~paces/index.html

Space Science

Center for Automated Space Science

Director: Dr. Michael R. Busby
Tennessee State University
Nashville, Tennessee 37203-3401
Date of Original Award: 1995

INTRODUCTION

The objective for the Center for Automated Space Sciences (CASS) at Tennessee State University (TSU) is to achieve a broad-based aerospace research capability. The purposes are to foster new science and technology concepts for autonomous space systems, expand the Nation's research base for aerospace research, increase participation by faculty and students at TSU and its partners at Western Kentucky University and South Carolina State University, and increase the production of underrepresented minorities who are U.S. citizens with advanced degrees in NASA-related fields.

RESEARCH ACCOMPLISHMENTS

During this reporting period, CASS researchers produced 42 publications that communicated their research findings. Research highlights are presented below.

Automated Astronomy Group

CASS relocated all four of its operating automatic telescopes to a new site 20 miles east of Nogales, Arizona, on private land at 5,700 feet. The location allows for expansion and better management of operations, and it will also house the CASS 24-inch Automatic Infrared Telescope, three new 30-inch Automatic Photometric Telescopes

(APT), and the 2-meter Automatic Spectroscopic Telescope when they are completed.

TSU's existing automatic telescopes continue to be highly productive: the Fairborn 10-inch APT collected 7,787 group observations, mostly of semiregular variable stars on 236 nights; the Vanderbilt/TSU 16-inch collected 15,418 group observations of chromospherically active, single and binary stars on 246 nights; the Smithsonian Astrophysical Observatory/TSU 30-inch APT made 7,014 group observations of lower main sequence stars on 247 nights; and the Smithsonian Astrophysical Observatory/TSU 32-inch APT made 7,000 group observations of solar-duplicate stars.

Several of the solar-type stars monitored by the APT's exhibit low-amplitude, radial-velocity variations suggestive of planetary-mass companions. Photometric observations from the APT's as well as observations of the calcium H and K lines for the stars 51 Pegasi, 47 Ursae Majoris, 70 Virginis, HD 114762, Rho 1 Cancri, Tau Bootis, and Upsilon Andromedae indicate that these stars are magnetically quiet. Analysis confirms that planetary companions are the likely cause of the radial-velocity variations.

A program was initiated to systematically monitor all solar-type stars newly discovered to have planetary companions. The photometric precision of the 32-inch APT is such that transits of planets as small as the Earth could be detected under favorable conditions. If transits are found, then the masses, sizes, mean densities, compositions, and origins of these planets could be deduced.

A preliminary analysis of the first 4 years of high-precision photometry of roughly 75 lower main sequence stars from the 30-inch APT has been completed. The results demonstrate a precision of 0.0002 mag over the observing season. This level of precision makes it possible, for the first time, to follow the luminosity cycles of Sun-like stars and correlate luminosity changes with the stars changing levels of magnetic activity. The preliminary results do not support a previous claim that the Sun might be photometrically quieter than other stars with similar mass and age.

Advanced Control Systems Group

There exist significant tradeoffs between robustness with respect to plant parameter variations and the sensitivity of a controller. All existing robust and optimal control design/synthesis techniques try to maintain the closed-loop stability and/or performance with respect to plant perturbations. The primary assumption is that the controller can be implemented with infinite precision—an assumption that is not valid in real-world systems. Based on testing, controllers obtained by these methods provide absolutely no freedom to move controllers' parameters. This is a severe problem in practice because it prevents further tuning of such controllers. TSU research will continue to search for new design schemes that can solve this problem.

RELEVANCE TO NASA STRATEGIC ENTERPRISES

CASS accomplishments support specific needs in two of NASA's Enterprises: Space Science and MTPE. Specifically, the completion and operation of a completely automated astronomical observatory will be used for obtaining ancillary and/or backup observations made with NASA satellite observatories. The CASS research results relating to the confirmation of the existence of extrasolar planets is relevant to the Origins program in the Office of Space Science. Also, a better understanding of Sun-climate links is being obtained from luminosity-cycle APT data of solar-type stars, which is relevant to the Sun-Earth connection theme in the Office of Space Science and to the MTPE Enterprise.

BENEFITS TO SOCIETY

The origin and distribution of life in the universe have intrigued civilizations since the earliest times. The question "Are we alone?" continues to fascinate the average citizen. The role of CASS in the search for other solar systems will play a role in seeking the answer to this question. Global environmental change affects all humans, whether the primary driver has anthropogenic or solar origins. The CASS research on luminosity cycles in solar duplicates will aid in determining the relative importance of each of these possible climate drivers.

STUDENT ACHIEVEMENTS

During this period, 43 undergraduate and 9 graduate students participated in the CASS program. Four students attended and presented papers at 1997 University Research Centers Technology Conference at the University of New Mexico.

Additional NASA Enterprise Area: Mission to Planet Earth
Telephone: (615) 963-7013
Fax: (615) 963-7027
E-mail: busby@coe.tnstate.edu
URL: http://coe.tnstate.edu

Institutional Research Awards

One purpose of the Institutional Research Awards (IRA) program is to strengthen the capacity of minority institutions to provide a quality learning and research environment for students traditionally underrepresented in science and engineering fields. Another purpose is to increase these students' opportunities to participate in and benefit from NASA and Federal research and education programs. Through IRA funding, minority institutions and researchers are given the opportunity to enhance their research and educational capabilities in NASA-related fields, providing the additional benefit of increasing their ability to enter the mainstream competitive research process.

Now in its fourth year, the IRA program funds are enhancing research and education capabilities at five Hispanic-Serving Institutions (HSI). This report summarizes the activities of these IRA's during the Academic Year 1996-1997 and Summer 1997 reporting period. During this period, 79 professional-level investigators were involved in research projects at the IRA's, including 49 faculty members, 18 research associates, and 12 postdoctoral fellows. A total of 145 students—87 undergraduates and 58 graduates—participated in these research activities. The research accomplishments were documented in 75 refereed papers or book chapters published during this time period. Significantly, 35 students were authors or coauthors of these publications. An additional 33 papers or book chapters, including 17 student authors or coauthors, were accepted for publication during this period. The broader research community was informed of this work through 88 technical presentations, including 24 presentations given by students.

During the reporting period, the five developing IRA's were able to leverage their NASA MUREP expenditures ($3.3 million, not including $0.9 million of student support) to an additional $8.8 million in new research support, $2.2 million from other NASA programs and $6.6 million from other agencies.

A major goal of the IRA program is to increase the number of underrepresented minorities and students with disabilities receiving advanced degrees and entering careers in NASA-related fields. Of the 145 students, 87 (60 percent) participated at the bachelor's-degree level, 29 (20 percent) participated at the master's-degree level, and 29 (20 percent) participated at the doctoral-degree level. Of the participating students, 76 percent were members of an underrepresented ethnic minority group. Perhaps most importantly, 36 degrees, including 17 bachelor's degrees, 16 master's degrees, and 3 doctoral degrees, were awarded to IRA students.

The reports for Academic Year 1996–97 and Summer 1997, from the five programs currently receiving IRA funding, follow.

Mission to Planet Earth

Tunable Solid State Lasers and Optical Imaging

Director: Dr. Robert R. Alfano
Department of Physics
The City College of the City University of New York
New York, New York 10031
Date of Original Award: 1994

INTRODUCTION

The goals of this program are to develop new and improved lasers (both materials and devices), to understand the propagation of laser light in turbid media, to utilize time-gating detector methods to study ultrashort events, to improve image quality through enhancement techniques, to develop image generation modeling and simulation algorithms, and to enhance the human-machine interface for improved system utilization. Undergraduate and graduate students participate in the research and acquire valuable experience with state-of-the-art equipment and techniques, which are of interest to NASA missions as well as to commercial product development.

RESEARCH ACCOMPLISHMENTS

Major research accomplishments during 1996–97 were made in laser development, medical applications of imaging, and image modeling and reconstruction studies.

Laser Development

City College specializes in near-infrared tunable solid-state lasers that have important applications in communications, remote sensing, and medical diagnostics. The specific approach is to develop laser materials and systems using chromium-doped host crystals. City College researchers have pioneered the use of chromium-doped forsterite and showed that it lases successfully in the near infrared. To extend the emission range to longer wavelengths, a new laser material, a chromium-doped germanate, was developed in 1996. This material, cunyite, emits at 1.2 to 1.5 µm, and it was the first reported lasing of chromium-doped germanate. By varying the structure of the host crystal, the tuning range can be changed. A series of such chromium-doped materials will be developed to provide continuous coverage in the near-infrared region and to allow designers to optimize the performance of systems such as fiber-optic communications. In 1997, the laser program achieved the following:

- Large crystals of chromium-doped germanate were grown and used in the first successful laser operation of a laser crystal (Cr^{4+}:Ca_2GeO_4).

- A new laser crystal material (Cr^{4+}:$LiScGeO_4$) was shown to lase in the near infrared for the first time. This material is a structural analog to forsterite and cunyite and shows progress toward developing a series of host materials for extended-range tunability.

- Two new classes of potential host materials with very strong near-infrared emission (1.1 to 1.5 µm) spectral range have also been formulated: Cr:Li_2(M)(Si,Ge)O_4 (M=Mg,Ca,Cd,Zn) and Cr^{4+}:Li(Sc,In)GeO_4. Large crystals of Cr:Li_2CaSiO_4 were grown at City College using a top-seeded solution growth technique.

- Direct diode pumping of forsterite and cunyite has been achieved. Pumping laser media with diodes is more efficient because it requires less power and is a simpler operation, as well as being more practical because of the compact size.

Medical Diagnostics

One optical-based medical diagnostics system developed to detect cancer uses the difference in fluorescence signatures between normal and cancerous tissue. A commercial instrument using this methodology is in clinical testing at a local medical center. In the past year, a new quantitative approach using fluorescence intensity scans and signature ratios was developed. This X-Y map presents a two-dimensional "picture" of fluorescence contours that map the underlying structure of the emitting tissue. Because cancerous cells have slightly different symmetry and shape compared to their noncancerous counterparts, the X-Y map provides a rapid, easy-to-use identification scheme for cancerous regions.

Manuel Zevallos, a NASA IRA-supported Ph.D. student, uses ultrafast lasers to study optical properties of turbid media for NASA's Langley Research Center.

Imaging in Turbid Media

The medical diagnostics program requires an understanding of the optical properties of the medium in which the probing light travels. In one approach, light scattered from the turbid medium (jet spray) is collected by a series of detectors surrounding the sample chamber. Using the inverse problem, a computer model inverts the collected data to generate the "object" that caused the scattered data pattern. Previously, City College developed a fast and noise-resistant inverse algorithm and successfully reconstructed an image of a hidden object in a highly scattering media. This year, City College developed a feasible inverse algorithm for three-dimensional images, which combines a two-dimensional matrix inversion with a one-dimensional (Fourier transform) inversion to obtain three-dimensional images of hidden objects. This method will greatly reduce computation time.

Pierre Galland, a Ph.D. candidate, studies distribution of jet sprays for NASA's Lewis Research Center in the IRA program at City College.

RELEVANCE TO NASA STRATEGIC ENTERPRISES

Tunable near-infrared solid-state lasers are of interest to NASA for applications such as eye-safe remote sensing. Particular areas include aerosol and molecular lidar, differential absorption lidar, wind measurements, and altimetry and ranging measurements. These laser systems have applications to remote-sensing systems in satellites for NASA's MTPE program.

Specific NASA needs were the subject of a meeting held at NASA's Langley Research Center (April 29, 1997), where NASA scientists and City University of New York researchers discussed areas of mutual interest. Outcomes were a new compact forsterite laser and a proposed method of probing the internal structure of an inhomogeneous scattering media, such as jet sprays or clouds. Using backscattered light from the Earth's atmosphere (from a laser located in an airplane or satellite), information on the Earth's atmosphere can be obtained. Langley currently has an active project to do this. City College proposes to treat this problem using a time-resolved photon backscattering model that includes multiple scattering and to solve the inverse problem. This approach is both advantageous and complementary to NASA's method. Also, NASA's Lewis Research Center has an ongoing collaboration with City College to determine jet spray droplet distributions.

BENEFITS TO SOCIETY

Laser uses are endemic to technological, commercial, medical, and military applications. Tunable solid-state sources have many uses, such as optical communications, ranging, environmental sensing, and medical diagnostics and therapy. Medical diagnostics, especially cancer detection, is of great interest to society. Optical-based diagnostics tools can be used to screen for breast, prostate, aerodigestive tract, and gastrointestinal tract tumors. Breast cancer death rates have been dropping primarily because of early detection; the 5-year survival rate for women has increased from 72 percent in the 1940's to 97 percent at present. Optical methods, such as those developed at City College, enable the detection of smaller tumors (1 to 2 mm) without side effects from x-ray exposure.

Other projects supported by this project also contribute to society's needs:

- *Materials Improvement*—City College has used atomic force microscopy to study the surface topography of carbon-based materials, such as a new hard carbon silica that combines an amorphous structure and graphite-like layering. This material has desirable properties: low density; low stress; low thermal expansion; high cracking threshold; fracture toughness; long-term thermal stability; extremely high thermal shock resistance; excellent interface and adhesion to silicon, metals, and ceramics; and absolute resistance to silicon etching acids. Applications include thin films as protective coatings and "bulk" materials for micro-electro-mechanical systems. Thus, it is of considerable potential interest to NASA as well as to industry.

- *Human-Machine Interface*—City College is improving the visual processing of video displays. This research is applicable to any situation in which complex graphic material must be presented to a human observer—the final "filter" through which any image must pass—for evaluation. Recent work has centered on the use of pseudo-color to improve the comprehension of information from image displays.

STUDENT ACHIEVEMENTS

NASA-supported research has resulted in 21 papers published in journals and 24 presentations made. Students were coauthors and/or copresenters on five papers and six presentations. In 1996–97, 20 NASA-supported U.S. students participated in the City College IRA research projects: 8 were graduate students (3 Hispanics, 1 African American, and 4 others), and 12 were undergraduates (5 Hispanics, 3 African Americans, and 4 others).

Additional NASA Enterprise Area: Aeronautics and Space Transportation Technology
Telephone: (212) 650-5533
Fax: (212) 650-5530
E-mail: alfano@scisun.sci.ccny.cuny.edu

High Performance Database Management with Applications to Earth Sciences

Director: Dr. Naphtali Rishe
School of Computer Science
Florida International University
Miami, Florida 33199
Date of Original Award: 1994

INTRODUCTION

Florida International University is developing a highly parallel data base system based on the semantic/object-oriented approach. The research aims to significantly improve the usability and efficiency of highly parallel data base computers and system clusters (tightly networked groups of systems). Researchers are developing algorithms and a data base management system that will have substantial advantages over current data base systems. The object-oriented system is based on the Semantic Binary Model of data bases. Recent results in data base theory and applications show considerable advantages of the Semantic Binary Model in comparison to the Relational Data Model. A semantic data base system will have better logical properties: friendlier and more intelligent user interfaces based on the stored meaning of the data, comprehensive enforcement of integrity constraints, greater flexibility, spatial data, scientific data, and substantially shorter application programs. This system will also provide higher efficiency for both small and massive numbers of processors and better exploitation of parallelism for data storage and processing.

Florida International University is also conducting research on such theoretical and applied issues as data base design methodology, data base design tools, information analysis, multimedia data bases,

distributed data bases, data base languages, data compression, and spatial data bases.

RESEARCH ACCOMPLISHMENTS

Researchers have developed query and indexing algorithms to provide very efficient full indexing, allowing fast access to every single fact in the data base. Furthermore, the algorithm guarantees optimality of the basic queries defined in the semantic algebra. Researchers have also developed a semantic optimistic concurrency control algorithm supporting theoretically maximal granularity without the overhead that such precision would normally require.

A multi-user semantic data base engine has been developed and is being tested. A user interface to this engine has also been developed using C++. A Java interface is nearing completion. Researchers have adapted SQL (Structured Query Language), which is the standard language for relational data bases, to semantic data bases. It has turned out that the size of a typical SQL program for a semantic data base is many times smaller than for an equivalent relational data base. Semantic data bases containing significant quantities of spatial data have been assembled for testing in the following areas: ocean temperature, ozone layer thickness, reflectivity, SeaWiFS (simulated), and Landsat. Also developed is a very large semantic schema (more than 2,000 relations and attributes) for environmental research activities at the South Florida (Everglades) Research Center of the National Park Service. Furthermore, a semantic data base is being installed for use by NOAA to manage wind data.

Florida International University is investigating better techniques for efficient storage of spatial data to allow random access to the data, along with associated textual data. Researchers are developing benchmarks for the semantic data base engine. The first semantic benchmark showed that on certain types of queries, the semantic data base is 30 times faster than a highly optimized fully indexed Oracle data base working on the same hardware. The Oracle data base also requires about 10 times more disk space than the semantic data base. The compression of facts and spatial data have been implemented in the data base, and researchers are investigating further improvement in compression of spatial data sets, the storage on immediate access devices of substantial volumes of such data, and the bulk storage or "data warehousing" of huge volumes of spatial data.

RELEVANCE TO NASA STRATEGIC ENTERPRISES

This research aims to support NASA's need for efficient access to the vast quantities of data that are being collected by satellites. An example of the type of data access Florida International's system will enable is embodied in the ozone data mentioned above.

During the reporting period, NASA's Goddard Space Flight Center and Florida International University agreed to establish a Regional Validation Center at the university. This collaborative effort will expand the practical applications of NASA satellite sensor readings, combined with other physical or logical data, to the benefit of the southeastern United States and beyond. This program will also strengthen the bond between NASA and Florida International's High Performance Database Research Center for the purpose of developing and implementing advanced data base technology. The mission of the Regional Validation Center at Florida International is to collaborate with Goddard to serve public and business needs for remote-sensing data obtained by NASA.

BENEFITS TO SOCIETY

The research indirectly benefits the average citizen by allowing scientific researchers to perform their work more efficiently. In the future, the data base technology being developed will be able to provide more efficient information access for everyone.

STUDENT ACHIEVEMENTS

During the reporting period, three NASA-supported undergraduate students received their bachelor's degrees in computer science from Florida International University. One of them has chosen to begin his graduate studies at the university; the other two have taken positions in industry. Four NASA-supported graduate students received their master's degrees in computer science. Two have gone on to work in industry, and the other two are now NASA-supported Ph.D. students at Florida International. The latter two also received their B.S. degrees at Florida International University under NASA support. NASA-supported students have continued to coauthor papers and to present these papers at conferences.

Additional NASA Enterprise Areas: Aeronautics and Space Transportation Technology, Human Exploration and Development of Space, and Space Science
Telephone: (305) 348-2025
Fax: (305) 348-1707
E-mail: rishen@n2.fiu.edu
URL: http://hpdrc.cs.fiu.edu/

Land Management in the Tropics and its Effects on the Global Environment

Director: Dr. Brad R. Wiener
Department of Chemistry
University of Puerto Rico at Rio Piedras
San Juan, Puerto Rico 00931-7717
Date of Original Award: 1995

INTRODUCTION

This project examines how land-use changes in Puerto Rico during the last 50 years—specifically the abandonment of agriculture followed by forest recovery—have affected environmental factors, physical and chemical properties of soils, watershed hydrology and stream water quality, soil animal and microbial populations, greenhouse emissions, and atmospheric chemistry. In addition, the Landscape Group studied variability in land use in Puerto Rico, and the Succession Group described the regeneration of native forested ecosystems following human disturbance.

RESEARCH ACCOMPLISHMENTS

The recovery of forested ecosystems in six areas in Puerto Rico representing the five main life zone/geology classes of the island has been described. Researchers examined plant physiology and special fungus required for the root growth (mycorrhizae) of trees, which is important in forest recovery. To test the generality of the results from Puerto Rico, the work was recently extended to the Dominican Republic. Additional studies and collaboration with researchers in the Republic of Palau, Colombia, Costa Rica, and Mexico have given the project an international focus.

The affects of land-use changes on climate, soils, water cycles, and water quality are being studied. This year, the university also initiated computer modeling of hydrology and erosion processes, as well as a collaborative study of soil changes in Puerto Rico with the Alabama NASA University Research Center. It was shown that soil release of greenhouse gases depends critically on the presence of a few plant species (called legumes) that use atmospheric nitrogen directly. Soil bacteria also play a role in converting soil nitrogen into greenhouse gases. Researchers are using advanced genetic techniques (such as DNA probes) to measure these bacterial populations during forest recovery. Soil fertility and greenhouse gas releases are both affected by the rate of plant litter breakdown. It was demonstrated that there is a strong correlation between earthworm populations and litter breakdown rates and that worm populations are strongly affected by land-use history. This past year, researchers also initiated the first earthworm exclusion experiment in the tropics, using soil electroshocking. Other atmospheric chemicals, both natural and human-made, can affect the persistence of greenhouse gases in the atmosphere. These reaction rates are being measured in the laboratory with advanced laser techniques.

An island-wide forest inventory using satellite images has been completed. The training infrastructure of the University of Puerto Rico has continued to be enhanced by adding new courses to the Environmental Sciences Program. The capabilities of the Spatial Analysis Laboratory have also been enhanced by adding a new Sun computer system, a top-of-the-line GPS receiver, several new state-of-the-art personal computers, photo-interpretation equipment, and GIS and satellite image analysis software.

RELEVANCE TO NASA STRATEGIC ENTERPRISES

The University of Puerto Rico contributes to NASA's MTPE by identifying specific changes in climate, hydrology, soils, and greenhouse gas fluxes that occur during land-use changes in tropical areas. The work attempts to relate social practices to environmental impacts and the capacity of native ecosystems to restore themselves. Changes in land-cover as areas are converted to human use, and then areas that are abandoned are readily interpreted from satellite information. This research is particularly relevant to the land-use and land-cover components of MTPE. The University of Puerto Rico provides baseline land-use and land-cover data to allow project researchers and others to address changes in biophysical, biogeochemical, and hydrological states, as well as ecological goods and services. The

variability studies will improve the models of environmental affects of future land-use changes.

BENEFITS TO SOCIETY

Land-use changes in the tropics are occurring at unprecedented rates. Researchers are identifying results—local and global, positive and negative—of particular land-use decisions in the tropics. This should contribute to making better-informed decisions about land use in the future. This research will lead to management schemes designed to enhance the recovery process. These management schemes are important to Puerto Rico and other tropical countries because of the services that forested ecosystems provide—watershed protection, renewable resources (timber), and carbon sequestration—and interconnections between land-use practices and global climate. Society will also benefit from the next generation of environmental scientists being trained by this project.

STUDENT ACHIEVEMENTS

Student training and research participation is a central goal of this project, and the University of Puerto Rico is increasing the number of high-quality underrepresented minority graduates in environmental science. In the past project year alone, 7 students have coauthored 6 peer-reviewed publications, 2 students are coauthoring manuscripts in preparation, and 33 students have coauthored 24 presentations at local and international scientific meetings. Project-trained undergraduates and master's students have pursued graduate studies at major stateside universities. Several undergraduate students are preparing theses based on this research, and one student, Tania Lopez, won the University of Puerto Rico's "Best Undergraduate Thesis" award for her work on soil erosion and land-use changes.

Telephone: (787) 765-5170
Fax: (787) 765-7717
E-mail: brad@adam.uprr.pr
URL: http://web.uprr.pr/nasa-ira

Space Science

The Use of Decentralized Control in Design of a Large Segmented Space Reflector

Director: Dr. Helen Ryaciotaki-Boussallis
Department of Electrical Engineering
California State University at Los Angeles
Los Angeles, California 90032
Date of Original Award: 1994

INTRODUCTION

The Control and Structures Research Laboratory (CSRL) at California State University at Los Angeles has been established for the design and fabrication/assembly of a test bed resembling the complex dynamic behavior of a space-segmented reflector telescope (Figure 8). Advanced technologies for decentralization, precision pointing, vibration attenuation, fault identification, controller reconfiguration, adaptive/robust control, neural-fuzzy control, system identification, and reflector shape control will be developed and experimentally validated on the test bed. These new technologies are of immediate interest to NASA, the aerospace industry, and the commercial sector.

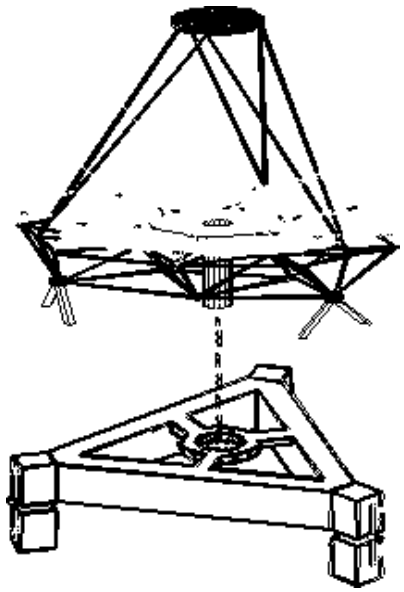

Figure 8. Description of a CSRL test bed.

RESEARCH ACCOMPLISHMENTS

The thrust of the CSRL research is to address, in an integrated way, the problems associated with control and structures interaction, distributed control of multi-input/multi-output systems, optics, electronics, actuator and sensor design, and digital implementation. One of the main research objectives is to demonstrate the advantages of a decentralized control approach to large-scale systems in a unique way. The contributions of the CSRL research during Academic Year 1996–97 include:

- New methods of structural optimization
- Design of high-performance/high-bandwidth actuators
- Data acquisition and digital signal processing for large structures
- Development of methods for structural decomposition as applied to large, flexible structures
- Application of robust control techniques, including H-infinity and adaptive control
- Development of neural network controllers
- System identification

RELEVANCE TO NASA STRATEGIC ENTERPRISES

Control architectures developed at CSRL are applicable to NASA astronomical missions and to other applications that employ segmented reflectors (such as SELENE). Results obtained with the CSRL research program are directly applicable to missions such as the Submillimeter Explorer, the Submillimeter Imager and Line Survey, and the Large Deployable Reflector. In particular, the decentralized control results can be extended to enable missions such as multispacecraft formation flying (Figure 9). Decentralization techniques are also well suited for microspacecraft attitude control, using multiple miniaturized sensors distributed on the vehicle. Future CSRL research in the area of failure detection and reconfigurable control will present a direct benefit to autonomous spacecraft control research and development currently under way at NASA and the Department of Defense.

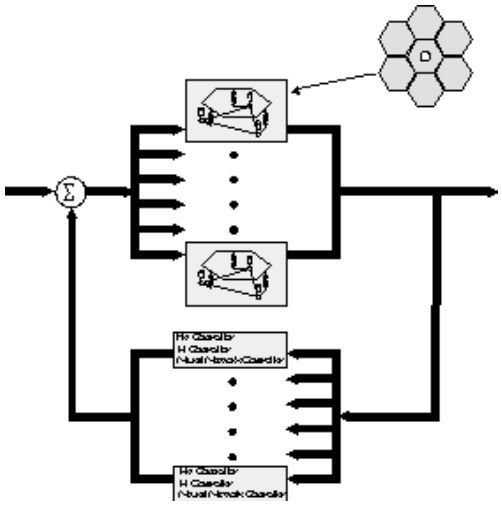

Figure 9. Block diagram of the decentralized control system.

BENEFITS TO SOCIETY

The decentralized results obtained can also be applied to the control of the Department of Energy's Long Arm Manipulator and to intelligent highways and vehicles. Adaptive control and neural network-based vibration attenuation and shape control results can be extended to acoustic disturbance isolation, which is of interest to the Department of Defense and to the automotive industry. Adaptive control results are directly applicable to advanced urban traffic control systems, such as intelligent highways and vehicles. Figure 10 shows a diagram of computer architecture.

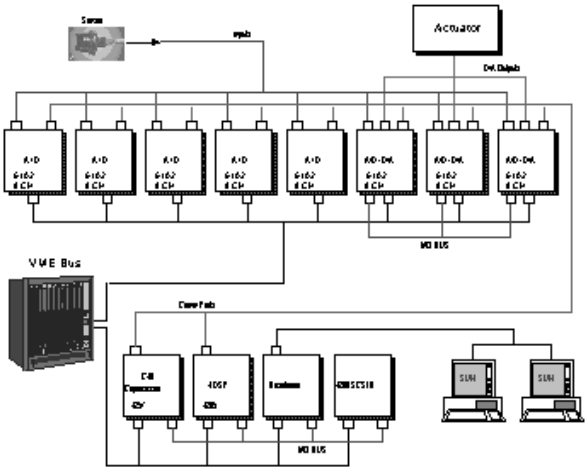

Figure 10. Block diagram of computer architecture.

STUDENT ACHIEVEMENTS

The CSRL project's student achievements include the following:

- More than 30 minority engineering students completed design projects and M.S. theses while supported by the project.
- Ten minority students assumed positions with major engineering firms, including Rockwell International, TRW, Phillips Electronics, Boeing, Hewlett Packard, McDonnell Douglas, and the Jet Propulsion Laboratory.
- Students participated in the preparation of articles published in technical journals.
- Students coauthored and presented several technical papers published at national and international conferences.
- Two students supported by the project were awarded $6,000 Lockheed-Martin graduate fellowships.
- Several undergraduate minority engineering students supported by the project continued their studies toward an M.S. degree.
- One of the students received a Ph.D.
- A student received the second place award at the California State University statewide research competition.

Telephone: (213) 343-4549
Fax: (213) 343-4547
E-mail: hboussa@calstatela.edu

Alliance for Nonlinear Optics

Director: Dr. Ronald D. Clark
Department of Physical Sciences
New Mexico Highlands University
Las Vegas, New Mexico 87701
Date of Original Award: 1994

INTRODUCTION

The Alliance for Nonlinear Optics is made up of faculty from Alabama A&M University, New Mexico Highlands University, Spelman College, the University of Alabama at Huntsville, and the University of Puerto Rico at Mayagüez. Each school is engaged in research in different aspects of the problem of developing new materials for nonlinear optics (NLO) and ultimately developing practical optical devices using this technology.

RESEARCH ACCOMPLISHMENTS

The mathematical method of predicting NLO properties that has been developed by Cardelino and Moore has continued to become more effective. In general, compounds that have been prepared as a consequence of their calculation method have proven to be good materials in solution, with actual values reasonably close to the calculated values. Unfortunately, the characteristics of the molecules (high polarity) that make them good NLO materials also tend to make them crystallize in a symmetric manner. As a consequence, many materials that seem good on paper, and even remain good in solution, are not useful in crystalline form. For this reason, a new effort has been initiated to develop better methods of predicting the orientation of molecules in the crystal state. Initial work on dimers has had at least some success. This area of the project has direct implications for many areas outside of NLO materials as well.

Work on predicting NLO behavior based on electron density maps determined by x-ray crystallography has also been successful, and work is continuing in this area. This work continues in collaboration with the Russian Academy of Science, Center for X-ray Studies, whose director, Dr. Mikhail Antipin, is now associated with the project at New Mexico Highlands University.

An alternate approach to the problem of crystal orientation is the possibility of co-crystallization of an NLO material with a linear optical material. This approach should lead to crystals with good NLO properties and is being pursued both at the theoretical and the experimental levels.

The problem of solvent effects on the measurement of NLO properties continues. Because of the presence of molecules of the solvent in the medium, measurements do not truly reveal the real NLO properties of the materials. Some solvents may even chemically bond with the new materials, altering their NLO properties. Therefore, we have investigated how solvents with various physical and chemical properties influence the measurements. In

the experiment designed and developed at the University of Alabama at Huntsville, an invisible infrared laser light was converted to scattered green light by the liquid samples. Although the light generated by the samples was green, it was not intense enough to be seen by researchers' eyes. However, powerful detectors were used to detect this light, which was collected by specially designed optical components. Because the interactions between the optical materials and solvents are complicated, further experiments are currently in progress to understand this solvent effect more clearly.

The electro-optical effects (linear and quadratic) on thin organic crystalline films, photosensitivity of fiber optics and the tetraethoxisilane-doped glass produced by the sol-gel technique, second harmonic generation by polymer-organic composites, and optical limiting in a phthalocyanine-tetraethoxisilane compound have also been studied with interesting results. Electro-optical effects observed in thin films of organic compounds with a very high birefringence are unique phenomena and allow one to obtain miniature electro-optical effects elements with a very low voltage supply for its performance. Significant light intensity modulation in both Pockel's and Kerr's effects have been observed at the University of Puerto Rico with various frequency-modulated direct-current voltages not higher than 10 volts, whereas commercial Pockel's cells require not less than 5,000 volts. Photosensitivity in a variety of materials, including traditional fiber-optics and compounds produced by the sol-gel technique, has been observed. These experiments will help in selecting the best materials for producing photosensitive devices, such as modulators and amplifiers.

RELEVANCE TO NASA STRATEGIC ENTERPRISES

NLO devices have potential applications in telecommunications and in optical computing. These are both important areas of interest to NASA's mission, which requires powerful yet lightweight and reliable communications tools. The crystal formation portion of the project is also of interest to the microgravity area, because high-quality crystals are best grown in a microgravity environment.

BENEFITS TO SOCIETY

The eventual development of practical optical devices using NLO materials will improve telecommunications and other areas, leading to lower costs and faster operation. This is absolutely necessary to keep up with the rapid deployment of the Internet and other new technologies.

STUDENT ACHIEVEMENTS

The first Ph.D. student working on an Alliance project graduated from Alabama A&M University. Several M.S. and B.S. students also graduated from the various schools in the Alliance. Several papers were presented at professional meetings by both students and faculty, and the number of papers published continues to grow. A list of papers and presentations can be found on the Alliance web page.

Telephone: (505) 454-3539
Fax: (505) 454-1916
E-mail: clark_ron@merlin.nmhu.edu

Faculty Awards for Research

NASA's Faculty Awards for Research (FAR) program seeks to provide the Agency with those resources necessary for mission completion while developing a diverse NASA-sponsored research community consisting of institutions with significant underrepresented minority enrollments. The FAR program supports faculty-driven research at HBCU's and OMU's that is relevant to the NASA Strategic Enterprises as described in the NASA Strategic Plan. Participation in FAR is currently open to tenure-track faculty of HBCU's and OMU's that offer degrees in engineering, mathematics, or science disciplines.

As a result of participating in this program, Principal Investigators contribute directly to NASA research and support the development of disadvantaged and/or disabled student researchers. Opportunities for participation in the Agency's mainstream research expand as recipients' research capabilities are enhanced through interaction with NASA researchers and facilities. In addition, the pool of disadvantaged and/or disabled students with research experience and interest in pursuing advanced degrees in the fields of science, engineering, and mathematics increases through faculty support.

During its sixth year, the FAR program funded 52 research projects (including 18 new projects) at 19 institutions—14 HBCU's and 5 OMU's. The data that follow were obtained from 30 of the 34 projects that had been funded for at least 1 year.

This report summarizes the activities of these FAR projects during the Academic Year 1996–97 and Summer 1997 reporting period. During this period, 47 professional-level investigators were involved in the 30 research projects—33 faculty members, 12 research associates, and 2 postdoctoral fellows. A total of 169 students—111 undergraduates and 58 graduates—participated in these research activities. The research accomplishments were documented in 25 refereed papers or book chapters that were published during this period. Significantly, 19 students were authors or coauthors of these publications. An additional 15 papers or book chapters, involving 14 student authors or coauthors, were accepted for publication during this period. The broader research community was informed of this work through 87 technical presentations given, including 21 presentations given by students.

During Academic Year 1996–97, the 30 reporting FAR projects were able to leverage their NASA MUREP expenditures ($1.2 million, not including $.07 million of student support) to an additional $2.7 million in new research support, $0.5 million from other NASA programs and $2.2 million from other agencies.

An additional objective of the FAR program is to increase the number of disadvantaged and/or disabled students receiving mathematics, science, engineering, and technology research experience and entering careers in NASA-related fields. Of the 169 students, 111 (66 percent) participated at the bachelor's-degree level, 51 (30 percent) participated at the master's-degree level, and 7 (4 percent) participated at the doctoral-degree level. Of the participating students, 88 percent were members of an underrepresented ethnic minority group. Perhaps most importantly, 47 degrees, including 34 bachelor's degrees, 13 master's degrees, and 2 doctoral degrees, were awarded to FAR students.

Brief reports from the projects funded during the Academic Year 1996–97 and Summer 1997 reporting period, along with abstracts of the newly funded projects, follow.

Ames Research Center (Reports)

Monitoring Software Through Integrity Constraint

Principal Investigator: Dr. Ann Quiroz Gates
Department of Computer Science
University of Texas at El Paso
El Paso, Texas 79968-0518
Date of Original Award: 1995

INTRODUCTION

The rapid advancement of technology has created the demand for more complex systems that integrate knowledge from varied domain experts. This creates several concerns: managing conflicts that may exist in the requirements, communicating specialized knowledge to members of the development team, and verifying the correctness of the program. This research effort addresses the above concerns through an approach that uses integrity constraints to specify properties of the problem domain and a monitoring mechanism that verifies their enforcement during program execution. The goals of the research are to develop a methodology for capturing knowledge about the problem domain, the intended context in which the program will run, and other knowledge through integrity constraints, to define a language for integrity constraint specification, and to design a monitoring mechanism that checks the constraints during program execution.

RESEARCH ACCOMPLISHMENTS

The research effort this year focused on analyzing the effectiveness of the constraint elicitation methodology and the expressiveness of the constraint language (each defined in the first phase of the project) by specifying a wide variety of problems. Nine programmers programmed each of the problems, and all program versions were tracked. Each of the programs is being instrumented with the constraints. The preliminary results of the study confirmed that the constraints were effective in finding errors and determining the source of the errors. The study has provided the foundation for developing a more powerful constraint language and monitor. Another effort is aimed at developing a tractability tool that can be used to reconcile differences between requirements and constraints and between constraints and code. The prototype tool, which is in the early stages of development, will be used to detect potential conflicts in the constraints. By using links from the constraints to a project data base, the tool will display relevant information when a constraint violation occurs.

RELEVANCE TO NASA STRATEGIC ENTERPRISES/ BENEFITS TO SOCIETY

The research is aimed at developing software tools that will improve the reliability and integrity of software. The monitor can be used to detect errors in NASA mission-critical applications during runtime and to trigger a graceful degradation of software when appropriate.

STUDENT ACHIEVEMENTS

One of the undergraduate students involved in the research has graduated and is currently employed in a NASA-related field. Francisco Fernandez and Michelle Lujan participated in NASA's summer internship programs and were named "Outstanding Undergraduate Computer Science Student" for 1996 and 1997, respectively. Both students continued in the graduate program. Francisco Fernandez has a full National Security Fellowship and is a National Hispanic Scholarship Fund recipient. These two students coauthored two refereed conference papers.

NASA Enterprise Areas: Mission to Planet Earth, Aeronautics and Space Transportation Technology, and Space Science
Telephone: (915) 747-6413
Fax: (915) 747-5030
E-mail: agates@cs.utep.edu
URL: http://cs.utep.edu/csdept/faculty/gates.html/

Theoretical and Observational Studies of Solar and Extra-Solar Planetary Atmospheres

Principal Investigator: Dr. Mark S. Marley
Astronomy Department
New Mexico State University
Las Cruces, New Mexico 88003
Date of Original Award: 1996

INTRODUCTION

There are now nine planets known to orbit Sun-like stars elsewhere in our galaxy—all detected by indirect means. As the search for more such planets continues, our research program seeks to answer

questions about the nature of these planets and the best approaches to detecting them. To do this, this project employs a suite of sophisticated radiative-transfer models to study the temperature structure and spectra of extrasolar planets and brown dwarf stars.

RESEARCH ACCOMPLISHMENTS

This project has modeled the thermal profile and the emitted and reflected spectra of extrasolar Jovian planets. Those planets discovered to date are all warmer than their counterparts in our solar system; as a result, clouds do not form in their atmospheres. Because these atmospheres are relatively clear of condensates, they are substantially darker in reflected light than those of our own Jovian planets. While these new planets do reflect about 70 percent of the incident light from their stars at wavelengths less than about 0.6 μm, at longer wavelengths they are far darker. In the red and near-infrared portions of the spectrum, water, methane, and ammonia molecules absorb most incident photons before they can be scattered back to space. As a consequence, extrasolar planets are very dark in reflected light in the near infrared, sending less than 1 percent of the incident light back to space.

Planets that are farther from their primary stars than those yet discovered will be cooler, and some will indeed have prominent water clouds in their atmospheres. Because water clouds are bright, such cooler planets will reflect far more of the incident radiation, particularly in the near infrared. If the next generation of ground- and space-based telescopes can measure the spectra of extrasolar planets, it will be possible to constrain their atmospheric temperature and composition.

RELEVANCE TO NASA STRATEGIC ENTERPRISE

The detection and characterization of extrasolar planetary systems form one of the highest priority goals of the NASA Origins program. By constructing a data base of both the emitted and reflected spectra of extrasolar Jovian planets, this project will facilitate the direct detection of these objects and the interpretation of such spectra as they become available.

BENEFITS TO SOCIETY

"Are we alone in the universe?" is one of the oldest questions facing humanity. To begin to answer this question, one must understand the occurrence and nature of planets around stars other than the Sun. The spectacular discoveries of extrasolar planets over the past year have shown that Jovian planets are abundant. As the search for extrasolar Earth-like planets begins, researchers must begin to test their understanding of the newly discovered planets. Observations by telescopes in the next century will test scientists' abilities to forecast conditions in the atmospheres of extrasolar Jovian planets. As the models are refined and tested, scientists will gain confidence in their ability to describe the atmospheric conditions of both Earth-like and Jovian atmospheres. Thus, this program is a small but necessary step in improving humanity's understanding of planets elsewhere in the galaxy and ultimately aiding in the search for planets that may harbor life.

STUDENT ACHIEVEMENTS

Three graduates students supported by this program attended the 1997 American Astronomical Society, Division for Planetary Sciences meeting where the research on extrasolar planetary atmospheres was presented.

NASA Enterprise Area: Space Science
Telephone: (505) 646-1913
Fax: (505) 646-1602
E-mail: mmarley@byjove.nmsu.edu

Ames Research Center (Abstracts)

Identification of Isolation of Microgravity Responsive cDNAs

Principal Investigator: Dr. Larry Lenard Lowe
Department of Biology and Physical Sciences
P.O. Box 190
Benedict College
Columbia, South Carolina 29204
Date of Original Award: 1997

ABSTRACT OF PROPOSED RESEARCH

The proposed research describes a method designed to identify genes that are specifically expressed in fiber-type specific skeletal muscles when exposed to microgravity but not in their nonexposed parallel controls. The messenger RNA (mRNA) differential display by means of the polymerase chain reaction

technology will be used. The isolation of unique, microgravity-responsive, fiber-type specific genes will serve as the basis of the investigation of their role in the recovery and/or maintenance process of skeletal muscle atrophy, both on Earth and in space.

Three protein gene families (c-myc basic helix/loop/helix, b-HLH, MyoD1; heat-shock HSP70; and LDH-A) will be investigated as possible microgravity-responsive genes expressed in fiber-type-specific skeletal muscles because of their potential and/or established behavior in response to cell and tissue injury. However, the primary focus will be on isolating unique members of the c-myc basic helix/loop/helix gene family.

This proposed research is related to the National Institutes of Health's interest in musculoskeletal protein structure and connective tissue diseases and to NASA's interest in exploration missions and investigations of musculoskeletal changes that occur during prolonged space flight. The major accomplishments planned for the performance period will be: (1) the acquisition of key molecular biology information that will significantly add to the knowledge base of muscular weakness that will be presented through research publications; (2) the enhanced competitiveness of the Principal Investigator to pursue other Federal and NASA research funding; and (3) the training of underrepresented minority students and the establishment of an independent research investigation by the Principal Investigator in molecular biology and space biology research.

NASA Enterprise Area: Human Exploration and Development of Space
Telephone: (803) 253-5007
Fax: (803) 540-2523

Development of a Transdermal Delivery Device for Melatonin in Vivo

Principal Investigator: Dr. Mandip Singh Sachdeva
Department of Pharmacy, College of Pharmacy
Florida A&M University
Tallahassee, Florida 32307
Date of Original Award: 1997

ABSTRACT OF PROPOSED RESEARCH

The primary objective of this study is to develop a novel transdermal delivery system (patches) of melatonin that can eliminate the problems associated with the oral administration of melatonin. Melatonin is a drug of choice in addressing "space adaptation syndrome" for space scientists and for airline pilots. However, after oral administration, melatonin has a very short half-life (45 minutes) and is very rapidly metabolized to 6-sulphatoxy melatonin (6-STMT). Because of the first-pass metabolism of melatonin, it is not bioavailable in significant amounts to cross the blood-brain barrier as it must to show its desired effect. Transdermal delivery of melatonin will overcome the above shortcomings associated with this drug.

Melatonin transdermal monolithic systems will be prepared by dissolving the drug and the polymer together, casting them as a matrix, and drying them. Various polymer combinations, along with penetration enhancers, will be used. The gelled melatonin matrix will be cut into individual units. The percutaneous absorption of melatonin patches through rat skin will be studied using the Franz® diffusion cell apparatus. The formulation with the best characteristics for its penetrability across the rat skin will be selected for further *in vivo* study.

The efficiency of the patch in delivering and maintaining melatonin levels *in vivo* will be assessed using hairless rats under various lighting conditions. The concentration of melatonin and 6-STMT in the urine, blood, serum, pineal gland, and cerebrospinal fluid will be studied, and this will be compared to that of melatonin delivered orally. Furthermore, the behavioral circadian rhythm changes after the administration of the transdermal melatonin patch will be investigated in hairless rats. The transdermal formulation will also be tested in hairless rats in centrifugation studies to simulate the effect of hypergravity. These studies will help us understand the implications of light and hypogravity (gravity vector) in the administration of melatonin in delivery systems for space scientists in the future.

NASA Enterprise Area: Human Exploration and Development of Space
Telephone: (904) 561-2790
Fax: (904) 599-3347
E-mail: Sacdem@mail.firn.edu

Dryden Flight Research Center (Reports)

Chemically Derived Dense Alumina-Zirconia Composites for Improved Mechanical and Wear Erosion Properties

Principal Investigator: Dr. Lebone T. Moeti
Department of Engineering
Clark Atlanta University
Atlanta, Georgia 30314-4391
Date of Original Award: 1994

INTRODUCTION

The development of new materials with improved properties, such as strength, toughness, and wear resistance for advanced structural applications (for example, such as engine components), will be crucial in meeting emerging high-technology aerospace applications. Zirconia-toughened alumina (ZTA) has the potential improvement in toughness and strength when compared to pure alumina to meet these technology requirements. The main objective in this project is to examine factors such as particle size, particle size distribution, and the nature of the polymorph to determine how they contribute to the toughening mechanisms and strength enhancement in ZTA's. These factors will be modified by the processing techniques used in the fabrication of ZTA ceramics.

RESEARCH ACCOMPLISHMENTS

The main accomplishment during this period has been examining the processing routes to fabricate the ZTA ceramic composites. To prepare the final ZTA composites hot pressing was done at various temperatures (1,400–1,600° C) and pressures (10 to 20 MPa). Mechanical properties such as fracture toughness, fracture strength, and the Young's modulus of the Ceramic Matrix Composites (CMC) will form the basis for the modeling to be conducted with the Structural Analysis Routines (STARS) code developed by researchers at NASA's Dryden Flight Research Center. This will aid in predicting how these composites will perform under load for various static and dynamic conditions. Correlation to the material and mechanical properties will then be used to establish bounds for failure modes for both static and dynamic conditions for these types of CMC's.

RELEVANCE TO NASA STRATEGIC ENTERPRISES/ BENEFITS TO SOCIETY

The ZTA ceramics being developed with improved strength and toughness are crucial to the materials program of NASA's Aeronautics and Space Transportation Technology Enterprise because they will meet the requirements of high-temperature engine components. The utility of such materials will be realized in high-strength, lightweight engine parts. In addition, high-temperature component parts fabricated from materials such as ZTA will be used in commercial aviation to improve fuel efficiency at higher operating temperatures.

STUDENT ACHIEVEMENTS

One graduate student in chemistry has completed an M.S. degree based on the research done in this project. The student has made one conference presentation and has coauthored two papers. In addition, two undergraduate students participated in the research that resulted in the conference presentation.

NASA Enterprise Area: Aeronautics and Space Transportation Technology
Telephone: (404) 880-6884
Fax: (404) 880-6890
E-mail: lmoeti@cau.edu

Development of an Ultrasonic and Fabry-Perot Interferometer (FPI) for Nondestructive Inspection of Aging Aircraft

Principal Investigator: Dr. Alphonso C. Smith
Department of Electrical Engineering
Hampton University
Hampton, Virginia 23668
Date of Original Award: 1994

RESEARCH ACCOMPLISHMENTS

During the past year, the FPI sensor detection system was continued, and refined modifications were made in the data acquisition and evaluation process. The ultrasonic and FPI detection system was improved from one- to multiple-sensor detectors, and physical models were developed to understand the physical phenomenon of this work. Multilayered flawed samples were fabricated for inspection by a prototype ultrasonic and FPI detector, and experimental data were verified with

simulated results. Finally, a prototype instrument package was laboratory-tested on actual airframe structures for documentation purposes.

The present period will be the end of the 3-year FAR grant award. The people involved in the project would like to continue this effort to build a prototype instrument using the technology developed but lacked sufficient funding to do so. The project is currently seeking funds to continue this important research effort.

RELEVANCE TO NASA STRATEGIC ENTERPRISES/ BENEFITS TO SOCIETY

The objective of this project was to help NASA maintain its leadership in space, Earth science, and aeronautical research. The project is helping in these areas by training students in laboratory research programs directed toward solving state-of-the-art measurement problems. In so doing, the project will not only help NASA meet its mission, but at the same time provide research training to underrepresented minorities and increase the pool of well-trained scientists and engineers. Students graduating from Hampton University will then be in a better position to help meet the Nation's critical labor needs for engineers and scientists.

STUDENT ACHIEVEMENTS

Students are being trained in the areas of fiber-optic sensor techniques, ultrasonics, and instrumentation measurement science. This research program has provided an opportunity for students to interact with researchers at NASA's Langley Research Center. As a result, these students' research skills and marketability have been greatly improved. One student who worked on the project is intending to continue his studies in graduate school.

NASA Enterprise Area: Aeronautics and Space Transportation Technology
Telephone: (757) 727-5597
Fax: (757) 727-5189
E-mail: al@engr1.engr.hampton.edu

Dryden Flight Research Center (Abstracts)

Hybrid Motion Planning with Multiple Destinations

Principal Investigator: Dr. Gerry V. Dozier
Department of Computer Science
North Carolina A&T State University
Greensboro, North Carolina 27411
Date of Original Award: 1997

ABSTRACT OF PROPOSED RESEARCH

This project would develop a hybrid motion planning system (MPS), which combines the concepts of visibility-based motion planning, artificial potential field-based motion planning, and evolutionary constrained optimization. The proposed hybrid MPS will be divided into two parts: a global motion planning system (GMPS) and a local motion planning system (LMPS). The GMPS and LMPS will be hybrid evolutionary systems that are able to quickly adapt to dynamic environments, goals, and specifications.

The GMPS will combine a novel representation scheme for obstacles within an environment, along with the concept of evolutionary search and a new concept referred to as visibility-based repair to form a GMPS that quickly transforms nonfeasible motions into feasible ones. The GMPS will be designed to develop motion plans for robots operating in dynamic environments with multiple moving destinations or targets.

The LMPS will be used to smooth out paths developed by the GMPS and can be used exclusively when global information about an environment is not present. The proposed LMPS will incorporate: (1) a new artificial potential field-based approach called the directed velocity approach, which is especially designed for local motion planning/ navigation within dynamic environments; (2) a mechanism to escape equilibrium points within the directed velocity approach; and (3) the ability to use information collected during the motion planning/ navigation process in an effort to predict unseen portions of the terrain.

This project also proposes the following education plan to complement our research agenda: (1) the development of undergraduate and graduate courses on robotics and evolutionary constrained optimization, (2) the development of a laboratory for the design and application of MPS's, and (3) the development of high school research programs for introducing these students to the areas of robotics and evolutionary constrained optimization.

NASA Enterprise Area: Aeronautics and Space Transportation Technology
Telephone: (910) 334-7245
Fax: (910) 334-7244
E-mail: gvdozier@ncat.edu

Goddard Space Flight Center (Reports)

Exploration of Properties of Aggregated Molecules for Optical Device Applications

Principal Investigator: Dr. Daniel L. Akins, Ph.D.
The City College of the City
University of New York
New York, New York 10031
Date of Original Award: 1996

INTRODUCTION

The formulation of nanostructural devices from molecules, such as molecular nanoscale devices, promises the same potential photonic/optoelectronic applications as the more conventional systems (such as those formed using epitaxially prepared inorganic semiconductor superlattices or conjugated organic polymers). These potential applications include nanoscale light emitters, nonlinear light manipulators, nanoscale sites in matrices for optical storage, light-emitting diodes, and diode lasers. Quite often, aggregated molecules and excitons arising from the excitation of aggregates (either through optical or electron-hole promoted processes) play fundamental roles in determining the properties of molecular systems.

Various types of excitonic states exist, including so-called one- and two-exciton states, that are of interest for research in the Principal Investigator's laboratory. The one-exciton band of states results from nitrogen contiguous molecules of the physical aggregate (which, in general, contains much more than nitrogen molecules) sharing one single-molecule excitation. In the two-exciton band, nitrogen molecules of the aggregate share two single-molecule excitations. The radiative decay from various types of excitonic states can involve a cooperative emission (also referred to as a coherent emission, or superradiance) of finite numbers of coupled molecules. This project addresses the spectroscopic and dynamic characterizations of properties of aggregated molecules absorbed onto surfaces or dissolved in homogeneous solution, as well as the exploitation of such systems for optical device applications.

RESEARCH ACCOMPLISHMENTS

Since the initiation of this project in December 1996, a large number of very significant research outcomes have occurred. Some highlights of these accomplishments are summarized below.

The optical and population dynamics relating to exciton-exciton annihilation and the effect of incident radiation intensity on the dynamics, as well as a separate study addressing methods for solving the dynamics equations and extracting mechanistic parameters, have been published. These are seminal investigations and explanations.

City College researchers have also published research addressing the system of a cyanine dye (specifically, 1,1'-3,3'-tetrachlorobenzimid-azolocarbocyanine, which is referred to as TTBC—see Figure 11) absorbed onto a silica substrate on which the molecules aggregate, forming excitonic states (upon excitation) involving coherent domains in which a finite number of molecules act cooperatively to emit photons. Conditions have been found under which lasing from such a system can be induced at a threshold of approximately 40 pJ/pulse; this is a factor of approximately 3×10^4 times smaller than that of the best of the other methods that have been reported. This system works as a "mirrorless" laser. The lasing mechanism has also been explained.

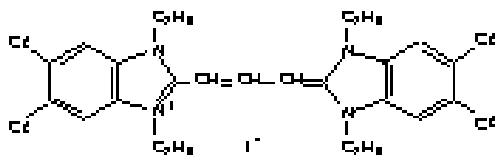

Figure 11. TTBC.

A cyanine dye (specifically, 3,3'-bis-(3-sulfopropyl)-1,1'-diethyl-5,5',6,6'-tetrachlorobenzimid-azolocarbocyanine, which is referred to as TDBC-3—see Figure 12) absorbed onto colloidal silver particles shows lasing at a phenomenally low threshold, enabling the nanostructural system to function as a mirrorless laser. The lasing is considered to result from a "whispering gallery" nanocavity mode associated with the aggregate coating on the surface of the silver particles. The threshold for this system was found to be 20 times smaller than that mentioned above. Researchers have submitted the finding for publication.

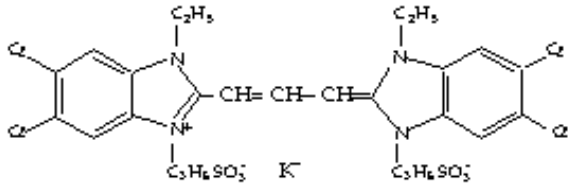

Figure 12. TDBC-3.

A patent disclosure has been filed with City University of New York for the aggregated molecules absorbed onto a silica colloid system, including potential device applications.

RELEVANCE TO NASA STRATEGIC ENTERPRISES

These research efforts fall under the Strategic Enterprise thrust of Mission to Planet Earth, with overlap to efforts aimed at using optical techniques for remote-sensing and search-and-rescue missions.

BENEFITS TO SOCIETY

Applications envisaged for the systems discussed above include: mirrorless lasers, laser gain materials with an ultralow threshold for lasing, materials for flat-panel display devices, superradiant coating materials for search-and-rescue and robotic vision applications (as opposed to the "LaserPaint" approach), materials for optical switches in optical/optoelectronic computers, and high-intensity light sources in near-field optical microscopy.

STUDENT ACHIEVEMENTS

One graduate student has been recruited to work on this project. She is now involved in every aspect of the research. A postdoctoral associate who recently graduated under the Principal Investigator's direction has contributed greatly to this effort.

NASA Enterprise Area: Mission to Planet Earth
Telephone: (212) 650-6953
Fax: (212) 650-6956
E-mail: akins@scisun.sci.ccny.cuny.edu

Formal Foundations of Agents

Principal Investigator: Dr. Albert Esterline
Computer Science Department
North Carolina A&T State University
Greensboro, North Carolina 27411
Date of Original Award: 1996

Report not submitted.

NASA Enterprise Area: Aeronautics and Space Transportation Technology
Telephone: (910) 334-7245
Fax: (910) 334-7244
E-mail: esterlin@ncat.edu

Basic Research in Atomic, Molecular, and Optical Physics in Support of NASA Strategic Enterprises

Principal Investigator: Dr. Kenneth A. Hardy
Florida International University
Miami, Florida 33199
Date of Original Award: 1996

INTRODUCTION

The final product states of the dissociative recombination (DR) reaction will be determined for neon (Ne), argon, and nitrogen (N). A cool beam of metastable argon will be produced to study the viability of argon for use in improved time standards.

RESEARCH ACCOMPLISHMENTS

Final product states have been determined for the DR reaction in neon. An improved value for the dissociation energy of Ne_2^+ has been determined. The preliminary results for the DR of N_2^+ in the excited A state have been obtained. A beam of metastable argon atoms with velocities of less than 50 meters per second has been obtained, and a magneto-optical trap for these cold atoms has been constructed.

RELEVANCE TO NASA STRATEGIC ENTERPRISES

The DR is an important reaction in planetary upper atmospheres, such as those of Earth and Mars. This reaction has been suggested as the cause of the differing isotopic ratios of nitrogen between Earth and Mars. A better understanding of the final product state distributions is necessary for improved atmospheric models and gas discharge plasma models.

Cold atoms in an atom trap offer the possibility of time standards that are four orders of magnitude better than those currently in use. Cooled and trapped rare gas atoms are good candidates for these improved atomic clocks. In addition, cool rare gas metastable atom beams may be used for atom lithography.

BENEFITS TO SOCIETY

This work will lead to a better understanding of the atmospheres of planets, better gas lasers, vastly improved atomic clocks leading to more accurate navigation systems, a better understanding of plasmas necessary for fusion power generation, and possible applications for higher circuit density in integrated circuits.

STUDENT ACHIEVEMENTS

Two minority students will be granted M.S. degrees and one minority student has a major research publication with the support of this project.

NASA Enterprise Areas: Mission to Planet Earth and Space Science
Telephone: (305) 348-2607
Fax: (305) 348-3053
E-mail: hardyk@servax.fiu.edu

Estimation of Ocean Primary Productivity using In-situ Fluorescence and SeaWiFS

Principal Investigator: Dr. José M. López Díaz
Department of Marine Sciences
University of Puerto Rico at Mayagüez
Mayagüez, Puerto Rico 00681
Date of Original Award: 1994

INTRODUCTION

The objective of this research is to develop enhanced accuracy estimates of ocean primary production at regional and global scales. The effort combines conventional oceanographic techniques, state-of-the-art optical and electronic instrumentation, and remote sensing. Experiments to date include *in-situ* measurements of optical properties using a submersible reflectance radiometer that matches the bandwidths available on the satellite-borne Sea-viewing Wide-Field-of-view Sensor (SeaWiFS), which provides information on ocean color. On-deck incubation of water samples using the radiocarbon technique is also used to develop "ground truth" estimates of primary production. A new xenon flash active fluorometer was recently acquired with project funds to obtain independent estimates of photosynthesis at sea. Researchers have focused their experiments on the eastern Caribbean Sea—a region that receives the seasonal influence of massive discharges of Orinoco River water.

RESEARCH ACCOMPLISHMENTS

This project has joined resources with another research group at the University of Puerto Rico at Mayagüez that has been conducting a time series of physical, chemical, biological, and bio-optical observations in the Caribbean Sea off the south coast of Puerto Rico since 1993. The serial station, at 17° 38' N 67° W CATS (Caribbean Time Series), was monitored monthly as part of research sponsored by NASA into the effects of massive Orinoco River inputs on optical variability and phytoplankton biomass and primary productivity of the northeastern Caribbean Sea. The group conducted a cross-Caribbean cruise to the source water of the

Orinoco River from which hypotheses about the controls on primary productivity in these waters are being advanced.

The lack of satellite ocean color data until recently precluded further advancement of these studies. These data are forthcoming from SeaWiFS. Therefore, this project is proposing to focus a group research proposal along the following objectives: (1) to estimate primary productivity in the eastern Caribbean Sea using different bio-optical models and to evaluate their accuracy relative to *in-situ* incubations; (2) to provide ground truth for estimates of primary production from satellite data; and (3) to assess the relative contribution of dissolved organic nitrogen, nitrogen fixation, and nitrate advection to primary productivity in the eastern Caribbean Sea.

RELEVANCE TO NASA STRATEGIC ENTERPRISES/ BENEFITS TO SOCIETY

These studies are providing the opportunity for advanced, specialized training of graduate students in NASA-relevant technology. The scientific results are contributing to new knowledge about the fate of carbon dioxide in the atmosphere-ocean system and cycling of biologically active elements of relevance to global change. This work supports NASA's Mission to Planet Earth Enterprise.

NASA Enterprise Area: Mission to Planet Earth
Telephone: (787) 834-7620
Fax: (787) 834-8025
E-mail: jo_lopez@rumac.upr.clu.edu

Effects of Aerosols and Cloud Interactions on UV, PAR and Crop Yields

Principal Investigator: Dr. Chia H. Yang
Department of Physics
Southern University and A&M College
Baton Rouge, Louisiana 70813
Date of Original Award: 1996

INTRODUCTION

The goal of this research is to assess direct and indirect effects of anthropogenic aerosols on surface fluxes of UVA (320–400 nanometers), UVB (280–320 nanometers), and PAR (photosynthetically active radiation; 400–700 nanometers). These flux changes will then be evaluated for their potential effects on crop yields. This project will study the sensitivity of crops to spectral radiation changes and develop capabilities at Southern University at Baton Rouge to estimate the agricultural and ecological impacts resulting from increased aerosol abundance.

RESEARCH ACCOMPLISHMENTS

During the past summer, C.H. Yang and D.S. Guo of Southern University at Baton Rouge visited the Atmospheric Science Division at Lawrence Livermore National Laboratory to work on the two-dimensional model. In addition, Drs. A. Grossman and K. Grant from Lawrence Livermore National Laboratory visited Southern University at Baton Rouge for discussions and to give lectures and technical assistance.

The Lawrence Livermore two-dimensional chemical-radiation-transport model was modified by adding the species of SO_2 and H_2SO_4 and a reaction to decay into H_2SO_4 (with a lifetime of approximately 30 days) to facilitate studies of aerosol transport. A Silicon Graphics computer system was installed at Southern University at Baton Rouge. The system includes one server, seven workstations, and a network connection to the Internet. Software to support this research project, including the latest versions of an IDL compiler, NetCDF, and LAPACK libraries, was also installed during this period. The Lawrence Livermore two-dimensional model and supporting framework was ported to the new Silicon Graphics Origin 2000 file server at Southern University at Baton Rouge. A test run of the model has been made at Southern University at Baton Rouge for up to 60 days' data. Some data analyses on International Satellite Cloud Climatology Project (ISCCP) cloud data were made using IDL programs to prepare to input data files to the model for studying aerosol cloud effects. An IDL program was written to process the output data of the model calculation of the Mt. Pinutabo eruption on June 15, 1991.

RELEVANCE TO NASA STRATEGIC ENTERPRISES

The results of this research will support NASA's Mission to Planet Earth Enterprise. The results will also help society understand the effects of aerosol and cloud interaction on radiation and food production.

STUDENT ACHIEVEMENTS

During this first year, five minority students were involved in this project; two of them spent their summer at Lawrence Livermore National Laboratory to conduct research related to this project. One graduated in the spring of 1997 and is currently employed by Hughes Electronics Company in California.

NASA Enterprise Area: Mission to Planet Earth
Telephone: (504) 771-4130
Fax: (504) 771-4341
E-mail: chyang@subrum.subr.edu

Goddard Space Flight Center (Abstracts)

The Development of a New Generation Trapped Radiation Database

Principal Investigator: Dr. Richard D. Bourgin
Department of Mathematics
Howard University
Washington, D.C. 20059
Date of Original Award: 1997

ABSTRACT OF PROPOSED RESEARCH

A prototype energetic particle data base will be constructed, whose data files will contain both particle flux data and ancillary information about the prevailing magnetosphere environment at the time of observation. This environment will be parameterized in terms of selected solar wind parameters and time-delayed geomagnetic indices. The research will determine the correct values of these time delays. Empirical trapped radiation models that correspond to a prescribed set of magnetospheric conditions may be built from such a data base.

The organization of the data base will be based on proposed research to determine a collection of magnetospheric states that can reasonably act as a discretization of the continuum of magnetospheric environments. In this organizational scheme, data files would reside nearby one another if the ancillary information in those files describes magnetospherically similar conditions.

Two Howard University students, one graduate and one undergraduate, will be involved in a substantive manner with most aspects of the proposed work. A close working relationship will also be maintained with colleagues at NASA's Goddard Space Flight Center. In particular, the data base organization research will be conducted jointly with Dr. S.F. Fung of the Space Science Data Operations Office.

NASA Enterprise Area: Space Science
Telephone: (202) 806-6835/6830
Fax: (202) 806-6831
E-mail: bourgin@xfiles.gsfc.nasa.gov

Boundary Layer Processes Affecting Tropical Cyclone Intensity Change

Principal Investigator: Dr. Patrick J. Fitzpatrick
Department of Physics, Atmospheric Sciences, and General Sciences
P.O. Box 17660
Jackson State University
Jackson, Mississippi 39217-0406
Date of Original Award: 1997

ABSTRACT OF PROPOSED RESEARCH

Currently tropical cyclone intensity forecasting is inadequate, and the factors controlling intensification rates are still not well understood. This research proposes a theoretical and observational analysis to understanding planetary boundary layer (PBL) processes that control tropical cyclone intensification. The major factor that affects intensity is eyewall buoyancy, which in turn is driven by ocean fluxes in the PBL. In turn, the controlling PBL agents are surface temperature, relative humidity, surface pressure, and vertical orientation of the eye. Recent observations of possible PBL cooling (which contradicts current thinking that no cooling occurs) requires an extensive analysis of the eyewall PBL, in which little research has been conducted in the past.

The proposed research methodology is: (1) an extensive analysis of thermodynamic variables and the thermocline from buoy and other data of the eyewall PBL to document the frequency of this cooling; (2) a budget calculation of processes contributing to this cooling; (3) a rigorous theoretical treatment of a hypothesis by Fitzpatrick (1996) explaining the maintenance of eyewall buoyancy in the presence of PBL cooling; and (4) a sensitivity

study of PBL cooling and Fitzpatrick's hypothesis using balanced vortex models and the MM5 mesoscale model.

NASA Enterprise Area: Mission to Planet Earth
Telephone: (601) 973-3614
Fax: (601) 968-8623
E-mail: patrick@stallion.jsums.edu

The Accuracy of Earth Observing System Measurements of Middle Atmosphere Dynamics

Principal Investigator: Dr. Denise Stephenson-Hawk
Physics Department
Clark Atlanta University
223 James P. Brawley Drive
Atlanta, Georgia 30314
Date of Original Award: 1997

ABSTRACT OF PROPOSAL RESEARCH

The overall objective of this 3-year study is to examine the validity of various "meteorologically significant" dynamical diagnostics calculated using data measured from the satellite platform. The initial focus of this study will be within the Northern Hemisphere's middle atmosphere. The proposed work will have as its focus two areas of particular concern: (1) the accuracy of the structure of global atmospheric temperature fields calculated from satellite measurements and (2) the sensitivity of various derived meteorological fields to errors in satellite-inferred temperature fields.

The satellite platform provides the most complete and consistent global coverage of the Earth's atmosphere. Because data obtained from this platform are frequently used to examine mathematical theories thought to describe fluid motions of the Earth's atmosphere, a thorough understanding of the attributes and limitations of the satellite's derived meteorological data base is desirable. This understanding is of particular significance because of the ongoing and proposed missions for NASA's Mission to Planet Earth program.

The specific objectives are: (1) to relate the sensitivity of Northern Hemisphere vertical profiles of temperature, derived from simulated satellite radiances, within the middle atmosphere to variations in the data used to initialize the temperature retrieval algorithms; (2) to relate the sensitivity of meridional fluxes of heat and momentum to variations in the initialization data used to define satellite-inferred temperature retrievals; (3) to delineate the limitations of using quasi-geostrophic/gradient approximations to define the atmosphere's dynamics fields; and (4) to begin to develop an approach to remedy the bias associated with inferred dynamical quantities that are due to the specification of an initialization data set during the numerical retrieval process.

Once the modeled studies are complete, the results will be used to enhance our current understanding of the global measurements obtained from the Earth Observing System platforms.

NASA Enterprise Area: Mission to Planet Earth
Telephone: (404) 880-6904
Fax: (404) 880-8499
E-mail: dhawk@denise.cau.edu

Jet Propulsion Laboratory (Reports)

Multilayer Thin Film Capacitors for High Performance Power Applications

Principal Investigator: Dr. Peter J. Gielisse
College of Engineering
Florida A&M University–Florida State University
Tallahassee, Florida 32310
Date of Original Award: 1996

INTRODUCTION

The goal of this research is to develop multilayer thin-film capacitor structures for applications in high-power and high-heat-generating electronic devices, power transmission and distribution, automotive energy systems, energy storage, electronic packaging, power supplies for laser systems, high-field pulsed magnets, and rail-gun power systems. Multilayer thin-film capacitor structures with the right dielectric properties, which can be manufactured at low cost, should make a major impact in these areas.

RESEARCH ACCOMPLISHMENTS

The magnetron sputtering system, which is used for dielectric and electrode film synthesis, can now be switched between a DC and an RF source, allowing

conducting or nonconducting materials as targets. A ramp cycle is available to build up the power level gradually and helps prevent possible target destruction. The carrier gas system has been completely rebuilt, and the sputtering gun has been replaced with a more efficient gun of newer design.

The thick-film facility has been installed and made operational. A special test screen, allowing for the production of small rectangular area films to check out film recipes for use in multilayer capacitor structures, has become available. Thick-film pastes based on nanosized particles are currently under development.

A dielectric film test and measurement facility has been designed and put into operation. This project has the capability to test with contacting rigid metal electrodes and with noncontacting electrodes of different sizes.

Thin films were deposited in a typical DC and RF plasma-assisted reactive physical vapor deposition setup onto aluminum-coated aluminum-nitrogen substrates. Optimal conditions have not yet been obtained. The silicon-aluminum-oxygen-nitrogen thin-film structures deposited in 100-percent argon were quite different from those generated in 100-percent nitrogen—the latter types indicating a resistivity 1 to 2 orders of magnitude higher. It was also noted that the resistivity and breakdown strength increased significantly as a function of time. Breakdown occurred at 60 volts for 100-percent argon environments and at 70 volts for 100-percent nitrogen, indicating the presence of defects, inhomogeneity, or insufficient film quality. Present efforts are studying the root causes. Aluminum-nitrogen films, both metal rich and stoichiometric, have been deposited on silicon, aluminum oxide, and nickel substrates. Dielectric characterization is in progress.

A software tool for the evaluation of multilayer structures has been developed in parallel with activities in support of the experimental thin-film capacitor research task. The current software program is useful in narrowing material property and geometry choices for any type of multilayer (capacitor) design and for determining the probability of adhesion or crack failure.

STUDENT ACHIEVEMENTS

During this year, five undergraduate students have worked on the program; one M.S. candidate and one Ph.D. candidate are finishing their respective thesis and dissertation. A paper was presented at the International Spring Seminar on Electronic Technology in June 1997, and it has been published in the proceedings.

NASA Enterprise Area: Aeronautics and Space Transportation Technology
Telephone: (904) 487-6362
Fax: (904) 487-6337
E-mail: gielisse@eng.fsu.edu

Fault-Tolerant and Self-Checking Logic System Design

Principal Investigator: Dr. Parag K. Lala
Department of Electrical Engineering
North Carolina A&T State University
Greensboro, North Carolina 27411
Date of Original Award: 1996

Report not submitted.

NASA Enterprise Area: Aeronautics and Space Transportation Technology
Telephone: (910) 334-7761 X215
Fax: (910) 334-7716
E-mail: lala@ncat.edu

High Tc Bolometer Development

Principal Investigator: Dr. Clinton B. Lee
Department of Electrical Engineering
North Carolina A&T State University
Greensboro, NC 27411
Date of Original Award: 1994

INTRODUCTION

The specific aim of this effort is to develop device-quality thin films of the YBaCuO superconductor on heterostructures that will enhance the effectiveness of bolometric devices. As an electrical and optical characterization facility, the specific mission of this project is to correlate the findings with microstructural details provided outside the laboratory. Many of these details are to be determined in laboratories at North Carolina A&T State University.

RESEARCH ACCOMPLISHMENTS

All components of the electrical characterization have been received. Once the internal wiring of the Dewar is complete, the automated control and data collection program already written for the system will be tested. This program is used for system manipulation and data collection, and it is written in Hewlett Packard Basic.

RELEVANCE TO NASA STRATEGIC ENTERPRISES

Among other aims, NASA's Space Science Enterprise seeks to explore the solar system. Fourier transform spectrometers (FTS) play a significant role in missions to the outer planets as well as in observations made on Earth and Mars. Improved passive detection of infrared radiation is of key importance to the necessary upgrade of FTS performance, to observe relatively weak signals of wavelengths greater than 100 nanometers from the atmospheres of the outer planets. Improvements in bolometer performance will put these detectors in the forefront as the choice for these instruments.

BENEFITS TO SOCIETY

Better understanding of critical atmospheric species, such as CO and HCN, are of great importance to us on Earth. Monitoring these species in our atmosphere is of apparent interest. Missions to other planets can provide us with key insights as to past or future possibilities for our own planet. This work also gives underrepresented minority students exposure to cutting-edge research, which will increase the number of underrepresented students with advanced degrees.

STUDENT ACHIEVEMENTS

The system has been assembled by a doctoral student, with the help of an undergraduate. He has also written the automated control and data collection program in Hewlett Packard Basic. Outside of this laboratory, he is fabricating bolometric devices and will be presenting a paper at the Materials Research Society (MRS) meeting in Boston during the fall.

NASA Enterprise Areas: Space Science, Human Exploration and Development of Space, and Mission to Planet Earth
Telephone: (910) 334-7760x217
Fax: (910) 334-7716
E-mail: cbl@ncat.edu
URL: http://genesis.ncat.edu/personal/lee.htm/

Jet Propulsion Laboratory (Abstracts)

A Prototype Object-Oriented GIS

Principal Investigator: Dr. Kofi Apenyo
Computer Science Department
P.O. Box 18839
Jackson State University
Jackson, Mississippi 39217
Date of Original Award: 1997

ABSTRACT OF PROPOSED RESEARCH

From its missions to space, NASA continues to collect massive amounts of data. In the past decade and half, geographic information systems (GIS) supported by relational data base engines have been deployed for the processing and presentation of much of the data to scientific end-users. Meanwhile, software engineering notions such as reusability, maintainability, and extensibility, which are offered by the object-oriented (OO) paradigm, have become universally accepted for systems development. To take advantage of the modern concepts, data management is rapidly shifting from relational to object technology. This proposal is aimed at developing a prototype OO GIS, using a commercial object data base management system.

The first phase of the research will investigate object data modeling approaches to GIS data sets. A preliminary data model is presented in this proposal. In the second phase, the best of several candidate models will be implemented on a commercial object data base management system. The prototype OO GIS will be tested with queries selected to demonstrate its geometric, topological, and thematic capabilities. The user interface of choice in a GIS is the graphical user interface; therefore, in the third phase, such an interface will be developed. Construction of a bibliographic data base of GIS/OO-related literature sources and a program library of public domain GIS/OO software

will be ongoing tasks throughout the duration of the project.

Student research assistants, who will be trained in GIS and OO technologies, are expected to participate fully in this effort. The Principal Investigator will take the lead and guide and coordinate all phases of the research.

NASA Enterprise Area: Mission to Planet Earth
Telephone: (601) 968-9481
Fax: (601) 968-2478
E-mail: Kapenyo@stallion.jsums.edu

Low Complexity, Refigurable Circuits for Data Compression

Principal Investigator: Dr. Bryan Usevitch
Department of Electrical and Computer Engineering
301 Engineering Building
University of Texas at El Paso
El Paso, Texas 79968
Date of Original Award: 1997

ABSTRACT OF PROPOSED RESEARCH

NASA is under constant pressure to design spacecraft in a more cost-effective manner. Building electronic hardware to fulfill this mandate is difficult because space missions require low volumes of specialized circuits. Field-programmable gate arrays (FPGA) are a recent development in hardware design that offer the promise of greater efficiency and flexibility through hardware reuse.

This research project will study FPGA design and rapid prototyping of signal processing circuits through the development of data compression hardware for NASA missions. The major objectives of this project are to develop working data compression circuits and build libraries of compression circuit blocks, to evaluate the impact of rapid prototyping and FPGA design methods on NASA missions, and to train students in rapid prototyping design methods. These objectives will be carried out through the development and testing of data and image compression circuits.

This project will deliver at completion working data compression circuits and functional libraries of compression elements. In addition, NASA will gain improved methods for rapid prototyping and a greater understanding of how to apply rapid prototyping to space missions.

NASA Enterprise Area: Aeronautics and Space Transportation Technology
Telephone: (915) 747-6964
Fax: (915) 747-7871
E-mail: usevitch@ece.utep.edu

Johnson Space Center (Reports)

Basic Studies of CdTe Solar Cells

Principal Investigator: Dr. Gregory B. Lush
Department of Electrical and Computer Engineering
University of Texas at El Paso
El Paso, Texas 79968
Date of Original Award: 1996

INTRODUCTION

CdTe/CdS solar cells have great potential for impacting photovoltaic energy production in both terrestrial and space applications because they are inexpensive to produce, can be lightweight if on metal-foil substrates, and should be radiation hard. However, CdTe/CdS large-area cell efficiencies remain near 10 percent, well below their potential as indicated by laboratory efficiencies of 15 percent and theoretical efficiencies of more than 25 percent. To boost device performance, basic studies are needed to investigate the mechanisms of CdTe solar cells, identifying the major sources of losses so that proper design and processing adjustments can be made to suppress those losses.

RESEARCH ACCOMPLISHMENTS

Eleven students have worked on various aspects of the project. The laboratory is established for constructing the CdTe solar cells, and the systems for their characterization are nearly complete. Soon, the laboratory will begin to fabricate solar cells. Once capable of fabricating CdTe thin films, detailed studies into the material and device characteristics of CdTe solar cells will begin. In a unique approach, researchers will look at the non-uniformities of cell performance using a CCD camera to observe electroluminescence, a Kelvin probe to observe voltage variations across the devices, and other, more traditional methods of

solar cell performance assessment with the added complexity of observing spatial nonuniformity.

No publications have resulted thus far. However, several individual projects are commencing in conjunction with the project's deposition system coming online, which should result in publications this year.

RELEVANCE TO NASA STRATEGIC ENTERPRISES/ BENEFITS TO SOCIETY

The overall objective of this work is to raise the level of CdTe/CdS solar cell performance to efficiencies comparable to their laboratory and theoretical potentials. Such an accomplishment will open new markets for photovoltaic energy production. Because such thin-film cells may be more resilient in the space environment, this work could also open new orbits to satellites.

NASA Enterprise Area: Human Exploration and Development of Space
Telephone: (915) 747-6632
Fax: (915) 747-5868
E-mail: lush@ece.utep.edu

Assessing the Putative Mechanisms of Gravity-Induced Cellular Changes

Principal Investigator: Dr. Gary L. Sanford
Department of Biochemistry
Morehouse School of Medicine
Atlanta, Georgia 30310-1495
Date of Original Award: 1995

INTRODUCTION

The goal of these studies is to provide an understanding of the impact of microgravity on wound healing. The specific objectives are to evaluate whether changes in vascular cell proliferation and migration induced by different gravitational fields are coupled to the expression of autocrine growth and migration factors, to assess whether simulated microgravity or hypergravity alters the expression of these autocrine growth and migration factors, and to investigate possible signal transduction mechanisms that may be involved in gravity-induced cellular changes.

RESEARCH ACCOMPLISHMENTS

There was a clear difference in wound closure for smooth muscle cells (SMC) under 6G compared to a control; 6G-treated SMC moved further into the wound area than controls by 8 hours and completely closed the wound by 16 hours. Cells maintained at 6G had increased growth and migration factor (TGF_{β} and c-myc) expression. These findings indicate that hypergravity induced a transient increase in these factors prior to cells migrating into the wound area. It was also found that f-actin expression increased in control cells treated with an inhibitor to the calcium-calmodulin protein kinase, with the greatest expression seen at cell-cell junctions and the perinuclear region. Under hypergravity, f-actin expression increased; the inhibitor was synergistic with hypergravity. These findings point the way to more mechanistic studies that may provide an understanding of how changes in gravity result in the cellular changes that have been noted in the past.

Wound healing was also examined using endothelial cells (to mimic a capillary wound) maintained under simulated microgravity with the horizontal clinostat model. Simulated microgravity-treated cells failed to close the wound area within 24 hours, indicating that this environment severely retards vascular wound healing (as shown in Figure 13). Antisense oligonucleotides (AS-oligos) to c-myc and c-fos prevented this inhibition of wound closure. Under microgravity, there was a relocation of vimentin from uniform dense cytoplasmic distribution to a diffuse filamentous network with distinct perinuclear accumulations. AS-oligos only altered the organization of vimentin and f-actin (as shown in Figure 14). These studies suggest that the influence of microgravity is mediated through changes in the expression of early response and growth regulatory genes, which in turn modulates the expression and distribution of cytoskeletal elements.

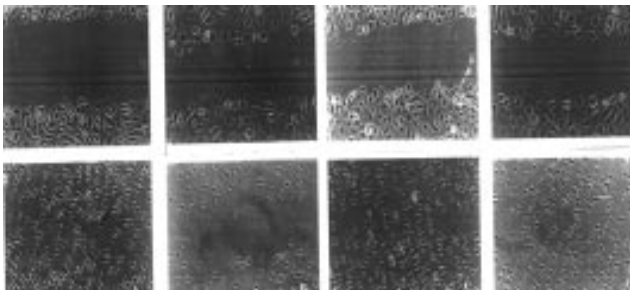

Figure 13. Endothelial cells under stationary conditions (A), simulated MGrav (B) with c-myc AS-oligos (C) or c-fos AS-oligos. The top panels are at time 0 and the bottom panels after 6 hours.

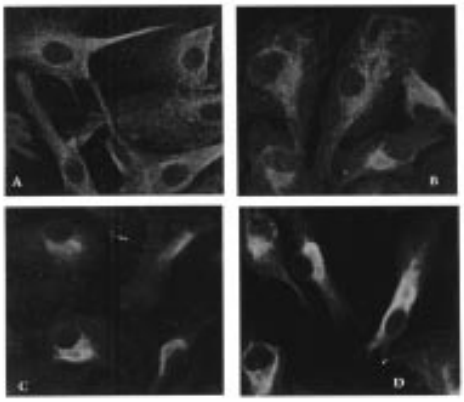

Figure 14. Fluorescent staining for vimentin (bright fluorescence) and f-actin (light fluorescent fibers) in endothelial cells under stationary conditions (A), simulated MGrav (B) with c-myc (C) or c-fos (D) AS-oligos.

RELEVANCE TO NASA STRATEGIC ENTERPRISES

Anticipated hazards for crewmembers in future long-term space flights may result in a variety of injuries, including fractures, deep punctures, and cuts. The microgravity environment of space may complicate the wound healing process. Understanding the underlying cellular mechanisms responsible for changes in the way vascular and other cells respond to a wound under altered gravity environments (such as during space flights) is a primary goal of the Life Sciences program of NASA. Achieving this goal is a necessity for the development of interventions that allow for continued and long-term manned space flights.

BENEFITS TO SOCIETY

These studies will provide insight into the mechanisms underlying how cells and tissues respond to a wound and an understanding of the cellular and molecular events involved in blood vessel wound healing.

STUDENT ACHIEVEMENTS

Felicia Love, a third-year medical student in the 5-year medical track, has presented one poster and conducted two oral presentations. In February 1997, she presented at the NASA University Research Centers Technical Conference in Albuquerque, New Mexico. A manuscript was published in the proceedings of this conference. Ms. Love also presented at the Ninth Annual Morehouse School of Medicine Student Research and Ninth Annual F.E. Mapp Science Symposiums in Atlanta, Georgia.

NASA Enterprise Area: Human Exploration and Development of Space
Telephone: (404) 752-1504
Fax: (404) 752-1978
E-mail: biochem@link.msm.edu
URL: http://www.msm.edu

Johnson Space Center (Abstracts)

Simulated Microgravity: A Model for Human Neural Cell Plasticity and Angiogenesis

Principal Investigator: Dr. Kamla Dutt
Department of Pathology
Morehouse School of Medicine
720 Westview Drive, S.W.
Atlanta, Georgia 30310
Date of Original Award: 1997

ABSTRACT OF PROPOSED RESEARCH

Long-term exposure to microgravity will have profound effects on all aspects of human physiology, including neural plasticity, neurobehavior homeostasis, circadian rhythms, ocular functions, and the cardiovascular system. It is well accepted that conditions of microgravity will alter neural and endothelial cell functions, yet the cellular and molecular events underlying the change are largely unknown.

The Morehouse School of Medicine has developed a precursor human retinal cell line by gene transfixion with a potential to differentiate and has very well-characterized endothelial cell cultures. Studies have shown that human precursor retinal cells are multipotential and cell fate is determined at the time of the last mitotic division or postmitotically in response to cell-cell interaction and/or autocrine/paracrine positional cues. Efforts to determine such cues often involve drastic metabolic manipulations or formation of reaggregates. A human retinal precursor cell line developed at Morehouse has been extremely useful in dissecting events in normal retinal development and in studying the role of exogenously added growth factors. The inherent advantage of this cell line is that it provides the opportunity to introduce and/or modulate extracellular cues, including alterations in gravity. In preliminary studies, it has been shown that retinal cells induce capillary formation, one of the major complications of diabetic retinopathy. This study proposes to use these two well-characterized systems to study cellular and molecular events altered by simulated microgravity using a NASA-developed bioreactor for cell growth, which simulates many aspects of microgravity.

NASA Enterprise Area: Human Exploration and Development of Space
Telephone: (404) 752-1769
Fax: (404) 752-1108
E-mail: Duttk@link.msm.edu

Gravity-Induced Changes on the Steroidalgenesis by Luteal Cells of the Pregnant Rat

Principal Investigator: Dr. Rajagopala Sridaran
Department of Physiology
Morehouse School of Medicine
720 Westview Drive, S.W.
Atlanta, Georgia 30310
Date of Original Award: 1997

ABSTRACT OF PROPOSED RESEARCH

Among the goals of NASA are those of enriching life on Earth through achieving routine space travel, exploring the solar system, and ultimately making it possible to live and work in space. As female astronauts become involved in these tasks, they will be spending extended periods of time in space and thus will be subjected to weightlessness and disruptions of normal living patterns. Assessing the effects of these factors on pregnancy is an important area of research because it could be a limiting factor to prolonged habitation by women in the weightless environment. However, a literature search in this field revealed that no studies have been performed to assess the gravity-induced changes on the production of steroid hormones of the ovary, which are responsible for implantation and maintaining pregnancy in mammals.

Ground-based studies using cultured luteal cells of pregnancy subjected to altered gravity will provide an insight into the possible effects of an altered space environment on pregnancy. Therefore, the objective of this proposal is to assess the gravity-induced changes on the steroid hormones produced by the luteal cells of the pregnant rat using an *in vitro* model system developed in the Morehouse laboratory. The specific aims of the proposed research are: (1) to assess the effects of altered gravitational changes on the luteal cell production of steroids by measuring pregnenolone and P in the medium of the cell culture; (2) to determine the effects of changing gravity conditions on the enzymes of the steroidogenic pathway; and (3) to propose further experiments to understand the mechanism by which these effects occur. The proposal plans to support the research training of three medical/undergraduate students.

NASA Enterprise Area: Human Exploration and Development of Space
Telephone: (404) 752-1684
Fax: (404) 752-1054
E-mail: sridaran@link.msm.edu

Kennedy Space Center (Reports)

Utilization of the SFC Database: A Framework for Modeling Shuttle Processing Operations

Principal Investigator: Dr. Martha A. Centeno
Department of Industrial and Systems Engineering
Florida International University
Miami, Florida 33199
Date of Original Award: 1994

INTRODUCTION

This effort seeks to use the Shop Floor Control/Data Collection (SFC/DC) for modeling activities related to the assembly of the Space Transportation System (STS). The Shop floor Modeling, Analysis, and Reporting Tool (SMART) framework was proposed, and this relies on knowledge derived from the SFC/DC as well as on other operational procedures. Derived knowledge will become part of a knowledge base managed through an M4 application, whereas operational characteristics are part of a relational data base managed through a Microsoft Access application.

RESEARCH ACCOMPLISHMENTS

Figure 15 depicts the various modules of SMART. The framework collects statistical information regarding work time, delay duration, and other historical summaries of relevance for future inferential analysis. A knowledge base trending and analysis module will utilize several data-mining techniques to synthesize trends in the historic behavior of certain measures of interest. Such trends will also become part of the knowledge base and/or part of the historic data base.

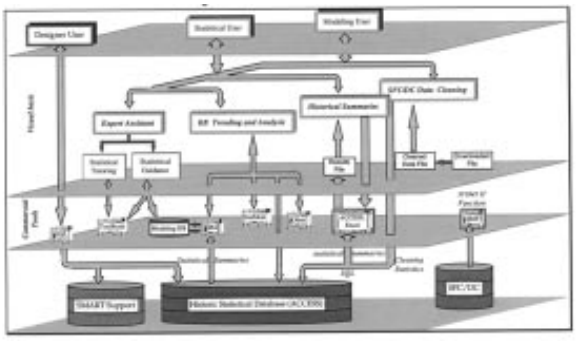

Figure 15. The SMART framework.

Various studies of the SFC/DC data have yielded rules that the current prototype uses to ascertain whether a record is complete and statistically useful. If the record is incomplete, the current prototype can repair the record based on the actual number of the Work Authorization Document (WAD) associated with the record. If the record is complete, SMART checks it to decide whether the record could be used in statistical analysis. Table 1 gives some examples of these rules.

Table 1. Cleaning criteria for each type of record.

1. If the WAD name begins with an STS number, then the WAD type = IPR.
   Example: 062V. . .; 047V. . .

2. If the WAD name begins with P, then the WAD type = ROMI, where P = {V1047, V1171, V1264, V1269, V1270, V3570, V5057, V067, V5069, V9001, V9002, V9019, V9023, V9028, V9045}.

3. If the WAD name begins with P and the WAD name does not have an "/" in it, then the WAD type = 0MI, where P = {V1047, V1171, V1264, V1269, V1270, V3570, V5057, V5067, V5069, V9001, V9002, V9019, V9023, V9028, V9045}.

This year, various data-mining algorithms have been identified for implementation. Also, the implementation of an inductive logic approach for knowledge derivation has been initiated. An industrial survey to assess the impact of a tool such as the autonomous interpreter was conducted. The engineering statistics tutorial was completed.
During the next year, a data-mining methodology and a prototype autonomous interpreter of statistical analysis will be implemented. Additional modeling capabilities will be incorporated into SMART, and testing of the prototype at NASA's Kennedy Space Center will be continued in preparation for its delivery during the spring of 1998.

RELEVANCE TO NASA STRATEGIC ENTERPRISES

This effort supports NASA's STS. By understanding what actually happens on the assembly floor, researchers will be able to identify the means to improve the various processes used to launch the STS.

BENEFITS TO SOCIETY

By identifying the means to improve the STS assembly process, quality and reliability will be improved while maintaining budget constraints. In addition, this effort is allowing several students to learn and develop their creativity, their sense of pride in the Nation's space program, and their professionalism. These students are bound to become exemplary leaders in our society.

NASA Enterprise Area: Human Exploration and Development of Space
Telephone: (305) 348-3531
Fax: (305) 348-3721
E-mail:centeno@eng.fiu.edu
URL: http://www1.eng.fiu.edu/ie/

Surfactant/Supercritical Fluid Cleaning of Contaminated Substances

Principal Investigator: Dr. Gary L. White
Department of Chemical Engineering
North Carolina A&T State University
Greensboro, North Carolina 27411
Date of Original Award: 1996

Report not submitted.

NASA Enterprise Area: Human Exploration and Development of Space
Telephone: (910) 334-7564
Fax: (910) 334-7904
E-mail: whitegl@garfield.ncat.edu

Kennedy Space Center (Abstracts)

A Continuous Hazard Tracking and Failure Prediction Methodology

Principal Investigator: Dr. Rolando Quintana
Department of Mechanical and Industrial Engineering
University of Texas at El Paso
500 West University
El Paso, Texas 79968-0521
Date of Original Award: 1997

ABSTRACT OF PROPOSED RESEARCH

The objectives of this applied research proposal are to develop a unified strategy that will expand the current capability for failure prediction, hazard tracking, and risk assessment; to provide research opportunities for underrepresented minorities and women in the area of system safety; to integrate this research into the classroom; and to transfer this technology so that there is a shift in traditional ways of assessing system safety to not only include why and how a system fails, but also to predict when it will fail with enough lead time to prevent loss of property, life, and mission effectiveness.

Specifically, a proactive methodology for hazard tracking and system failure prediction called the Continuous Hazard Tracking and Failure Prediction Methodology (CHTFPM) will be created by using principles of work sampling and control charting. It is proposed that the CHTFPM be implemented and independently tested at the NASA's Johnson Space Center, NASA's Kennedy Space Center, and NASA's Marshall Space Flight Center for a particular hazard class (such as fire or contamination) defined by the space agency. Experimentation and statistical analysis will determine the construct and content validity of this proposed NASA system safety tool.

The proposed research will provide NASA with the capability of meeting system safety requirements in a more reliable, timely, and cost-effective manner by developing predictive strategies for system safety analysis and tracking. Its educational mission will consist of creating research and academic environments of excellence that will result in the training of qualified minority graduate and postgraduate scientists and engineers.

NASA Enterprise Area: Aeronautics and Space Transportation Technology
Telephone: (915) 747-7990
Fax: (915) 747-5019
E-mail: quintana@vlobos.me.utep.edu

Control and Calibration of an Automatic Radiator Inspection Device (ARID)

Principal Investigator: Dr. Rodney G. Roberts
Department of Electrical Engineering
Florida A&M University
2525 Pottsdamer Street
Tallahassee, Florida 32310
Date of Original Award: 1997

ABSTRACT OF PROPOSED RESEARCH

This project is a significant extension of the Principal Investigator's work as a 1996 ASA/ASEE Summer Faculty Fellow at NASA's Kennedy Space Center. As a Summer Faculty Fellow, he derived the inverse kinematics, statics, and stiffness for ARID, an automated radiator inspection device for inspecting the radiator panels of the Space Shuttle orbiter. The focus of this project is on modeling and simulating the dynamics of ARID, designing and evaluating control strategies, and calibrating ARID.

NASA Enterprise Area: Human Exploration and Development of Space
Telephone: (904) 487-6458
Fax: (904) 487-6479
E-mail: rroberts@eng.fsu.edu

Langley Research Center (Reports)

Phenylethynyl Containing Polyarylene Ethers/Polyimides Resin Infiltration of Composites

Principal Investigator: DeRome O. Dunn
Center for Composite Materials Research
Mechanical Engineering Department
North Carolina A&T State University
Greensboro, North Carolina 27411
Date of Original Award: 1996

INTRODUCTION

The objective of this research is to make composites by the Resin Transfer Molding (RTM) method. The resin of interest is newly developed at NASA's Langley Research Center by Dr. Brian Jensen. This resin is specially formulated to be used at temperatures of about 300° C while having a relatively low and stable melt viscosity before cure-enabling RTM processing.

RESEARCH ACCOMPLISHMENTS

The following work on composites was conducted during the first year: resin synthesis; measurement of resin viscosity and other properties; resin wetting studies; CAD drawing, development, and design of mold; carver press insulation; compression molding; compression testing; fiber volume testing; and microscopic sample preparation.

RELEVANCE TO NASA STRATEGIC ENTERPRISES

High-temperature material applications are of importance to NASA's ongoing support of technological developments in the aerospace industry. An example is the High Speed Civil Transport (HSCT), which requires structural materials capable of withstanding temperatures of 300° C. High-temperature materials will allow aircraft to be more efficient and faster while carrying bigger payloads. The RTM process for making composites is inexpensive compared to other methods because: (1) a complex shape can be made as one part; (2) the RTM process is capable of producing near-net-shape composites, which reduce and/or eliminate machining; and (3) composite aerospace structures permit weight savings. These advantages for high-temperature composites could be employed if structural composites are made by the RTM process with this resin.

BENEFITS TO SOCIETY

The use of high-temperature composites in aerospace applications will allow for the maintenance and/or improvement of current air transportation advances while avoiding a significant increase in cost to the consumer. By using these composites, aircraft can be made faster (such as the HSCT), comparably lighter (allowing higher fuel efficiency and a larger payload), and more durable (enabling less maintenance)—all of which will help moderate costs. The use of RTM processing for aerospace structural composites will help hold down the cost of aircraft construction by enabling a reduction in the number of structural parts and the amount of machining and labor involved.

STUDENT ACHIEVEMENTS

Two graduate students and three undergraduate students were involved in research activities during the reporting period. One student was a chemical engineering major, and four were mechanical engineering majors. They each traveled to NASA's Langley Research Center to visit with the technical monitor, Dr. Brian Jensen. Valerie McLaughlin, a graduate student in chemical engineering, participated in a summer co-op at Langley supported by grant funding. Saunya Amos, an undergraduate student in mechanical engineering, presented a poster titled "Acid Digestion: Fiber Volume Fraction Determination" at the First Annual NCAMP Undergraduate Research Conference, North Carolina A&T State University, Greensboro, April 11, 1997. The students participated in initial research development during this first year of grant funding.

NASA Enterprise Area: Aeronautics and Space Transportation Technology
Telephone: (910) 334-7620
Fax: (910) 334-7417
E-mail: derome@ncat.edu

Micromechanical Characterization and Texture Analysis of Direct Cast Titanium Alloy Strips

Principal Investigator: Dr. Hamid Garmestani
Department of Mechanical Engineering
Florida A&M University-Florida State University
Tallahassee, Florida 32310-2175
Date of Original Award: 1996

INTRODUCTION

The purpose of this project is to perform a complete microcharacterization (including texture/microtexture and mechanical analysis) on several alloys of titanium and titanium aluminides produced by the melt overflow rapid solidification technique (MORST).

RESEARCH ACCOMPLISHMENTS

The microstructures, crystallographic textures, and mechanical properties have been investigated in commercial titanium and γ-TiAI alloy sheets strips and foils processed via MORST. The direct cast (DC) foils were fully dense and exhibited equiaxed transformed grain structures and weak $(11\bar{2}0)$ parallel to the normal direction solidification textures. After cold rolling, split {0002} textures were observed in both DC and ingot metallurgy processed foils with the basal poles concentrated approximately 30° from the normal direction toward the transverse direction (Figure 16). Crystallite orientation distribution function analysis indicated the presence of an orientation tube in the cast specimens near $(\bar{1}01\bullet10)[1\bar{2}10]$ and $(\bar{1}018)[0\bar{1}10]$. It is suggested that these textures are a result of the lattice rotations and nonuniform cooling that occurs during the casting process. After rolling and annealing, main texture orientations of $(10\bar{1}3)[10\bar{1}1]$ were observed. The mechanical properties of the DC foils were comparable to ingot metallurgy foils. The chill cast ingots exhibited coarse lamellar $\alpha_2+\gamma$ structures with the lamellae oriented perpendicular to the direction of heat flow. These lamellar arrangements imparted strong $<111>_\gamma$ and $<0001>_{\alpha_2}$ fiber textures (10 times random and 19 times random, respectively) perpendicular to the chill walls. The results suggest that high-quality titanium foils can be processed via MORST without the need for costly and wasteful hot rolling and annealing steps resulting in reduced processing costs.

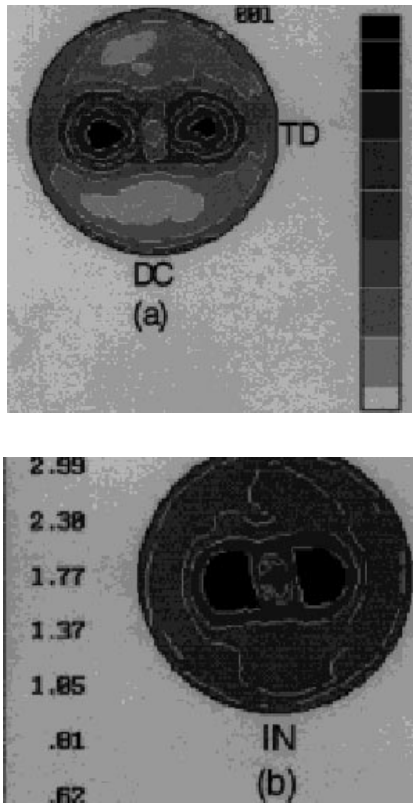

Figure 16. After cold rolling, split textures observed in both DC and IM processed foils with the basal poles concentrated 30° from the normal direction toward the transverse direction.

RELEVANCE TO NASA STRATEGIC ENTERPRISES/ BENEFITS TO SOCIETY

The success of this project will result in an alternative, cost-effective technique of the metal sheet-forming process for high-temperature alloys of titanium and titanium aluminides, which is part of NASA's long-term objective to produce light element alloys for aircraft industries. This will benefit society by making our aircraft industries more competitive in the world market.

STUDENT ACHIEVEMENTS

Four undergraduates (Gabrielle Penn, Candice Henderson, Mathew Thames, and Lathanza Williams), together with one graduate student (Enga Wright), have been involved in this project. Dr. Mark Weaver, a postdoctoral research scientist funded through a NASA center (CeNNAs), and Dr. H. Garmestani have been in charge of this project, which resulted in four different publications.

NASA Enterprise Area: Aeronautics and Space Transportation Technology
Telephone: (904) 487-6167
Fax: (904) 487-6337
E-mail: garm@magnet.fsu.edu

Active Control of Aerodynamic Noise Sources

Principal Investigator: Dr. Gregory A. Reynolds
Mechanical Engineering Department
New Mexico State University
Las Cruces, New Mexico 88003
Date of Original Award: 1996

INTRODUCTION

Aerodynamic noise sources become important when propulsion noise is relatively low, such as during aircraft landing. Under these conditions, important sources of aerodynamic noise include the extended flaps of high-lift systems and extended landing-gear systems. Ongoing NASA-industry efforts are identifying these important aerodynamic noise sources and the associated flow/airframe interactions. The research program described here is focused on further characterization of these interactions and on the development of flow control approaches for noise reduction. In particular, the objective is to develop active control approaches to address the flow instability and/or receptivity properties that drive unsteady flow/airframe interactions. Experiments are being conducted in the Low Turbulence Water Channel (LTWC) facility to achieve this objective. Flow visualization and velocimetry are used to evaluate unsteady flow structures associated with noise generation at the tips of a wing flap. The relatively long transient flow response in the LTWC allows active flow manipulation to be evaluated in detail.

RESEARCH ACCOMPLISHMENTS

Student design projects are complete on several flow-conditioning components of the LTWC. These include structural components for turbulence reduction screens, a stilling-chamber fairing, and a two-dimensional uniform flow-manifold. Students are now installing the turbulence reduction components and fairing in the LTWC. A manifold scale model was built and tested. Figure 17 shows its effectiveness in maintaining a zero-pressure gradient. Other student projects have developed a wing model and traversing mechanism for the LTWC tests, as well as a laser scanner device for light-sheet visualization. This laser scanner is shown being assembled beneath the LTWC test section in Figure 18.

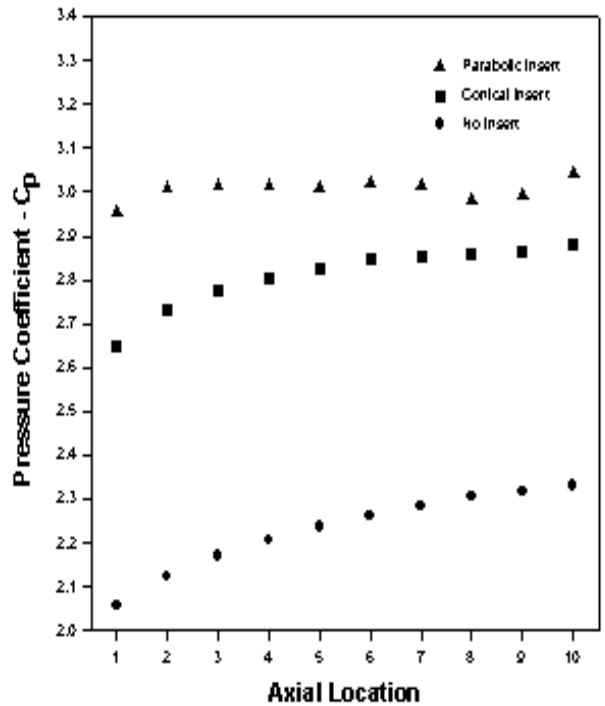

Figure 17. Manifold pressure distribution.

Figure 18. Two-component laser scanner.

RELEVANCE TO NASA STRATEGIC ENTERPRISES

This research interfaces with NASA's Advanced Subsonic Technology program, in particular with the focused program on noise reduction. As these NASA programs combine a range of unique capabilities in a complementary fashion to address aerodynamic and aeroacoustic issues, this project will enable the near-term development of active control technologies through a series of small-scale experiments.

BENEFITS TO SOCIETY

A primary objective of this effort is to reduce aircraft noise, which is of direct benefit to both passengers and the public near airports. In a broader sense, basic research in active flow control will provide technologies that will bring future benefit to the public through improved commercial and consumer products.

NASA Enterprise Area: Aeronautics and Space Transportation Technology
Telephone: (505) 646-4345
Fax: (505) 646-6111
E-mail: greynold@nmsu.edu

Identification of Surface and Near Surface Defects and Damage Evaluation

Principal Investigator: Dr. Mohamed A. Seif
Tuskegee University
Tuskegee, Alabama 36088
Date of Original Award: 1996

INTRODUCTION

This research is aimed at developing and demonstrating a novel, automated, nondestructive evaluation technique, called laser speckle shearing interferometry (shearography), capable of determining flaws and initial development of microcracking and its subsequent propagation in aluminum-, titanium-, and nickel-based superalloys and composite materials. This includes the characterization and space-time evolution of material properties in aggressive dynamic and tribological environments (such as fatigue, flaw initiation and propagation, and friction). The four significant factors in final failure—namely, the number and character of the flaws, the load environment, the residual stress level, and the mechanism of failure for the material—will be investigated. The technique will be enhanced with other techniques, such as dual-beam digital shearography and the phase-shift method. The results obtained from this approach will be compared to and coupled with results from other techniques, such as Moire interferometry and laser speckle photography. This will help establish a better understanding of the behavior of the materials under such conditions.

RESEARCH ACCOMPLISHMENTS

The effect of various loads has been investigated on specimens with different crack angles. A methodology was developed for filtering the shearographic images for clarity, and the fringes obtained provide a good quantitative and qualitative representation of material properties in scrutinized specimens. An analytical procedure has been developed to calculate the out-of-plane strain component. From the calculated strain component, the out-of-plane deformation can be calculated and constructed. This work shows that electronic shearography is useful in the detection of microcracks and weak spots caused by internal pressure. This technique is becoming more promising with continuous developments in electronics associated with recording, analysis, and filtering the signals obtained.

RELEVANCE TO NASA STRATEGIC ENTERPRISES

One of the highest priorities within the NASA logistics community is to obtain sufficient information about material degradation through the nondestructive evaluation of aircraft structures and components. The recent drive to enhance performance by incorporating ceramic components into turbine engines has led to increased demand for the creation of new flight-line instrumentation capable of detecting nonvisible subsurface damage. Without adequate wear and failure prediction, opportunities to fully utilize this new and emerging technology will be lost.

BENEFITS TO SOCIETY

Proper maintenance of existing aerospace structures and mechanical components depends mainly on accurate predictions and an understanding of the severity of flaws caused by fatigue, corrosion, wear, plastic deformation, and other factors. By allowing fundamental real-time measurements to be made in situ, fast detection of defects such as disbonds and microcracking can be achieved.

NASA Enterprise Area: Aeronautics and Space Transportation Technology
Telephone: (334) 727-8128
Fax: (334) 727-8090
E-mail: seif@acd.tusk.edu

Constitutive Modeling and Testing of Polymer Matrix Composites Incorporating Physical Aging at Elevated Temperatures

Principal Investigator: Dr. David R. Veazie
Department of Engineering
Clark Atlanta University
Atlanta, Georgia 30314
Date of Original Award: 1994

INTRODUCTION

Micromechanical analyses and the finite element method were used to develop a model to predict the long-term behavior of the graphite-reinforced thermoplastic polyamide composite IM7/K3B. An analytical study was also undertaken to investigate the effects of the aging-time reference used in the time/aging-time superposition technique that provided the material properties required to make long-term compliance predictions of the composite.

The IM7/K3B composite is a graphite-reinforced thermoplastic polyamide with a glass transition temperature (T_g) of approximately 240° C. Along with micromechanical analyses and the finite element method, experimental results from neat K3B resin provided short-term (momentary) creep compliance curves, which allowed for evaluating the long-term compliance behavior of the composite. The momentary sequenced creep/aging curves were collapsed (using time/aging-time superposition) through a horizontal (time) shift using the shortest, middle, and longest aging-time curve as the reference curve. Two matrix-dominated loading modes, shear and transverse, were investigated in tension or compression. Creep compliance and the effects of physical aging on the time-dependent response were measured for uniaxial loading at several isothermal conditions below T_g and were compared to the model.

RESEARCH ACCOMPLISHMENTS

In this study, a unidirectional composite was modeled, and a square array packing of circular cross-section fibers was assumed. (A schematic of the cross-section of the unidirectional fiber-reinforced composite is shown in Figure 19a.) For a normal load applied in the x_2 direction, the composite was subjected to plane strain deformation. Furthermore, because of symmetry and the periodicity of fiber spacing, the state of stress and deformation in the composite was completely defined by the stresses and strains in a quarter region of a unit cell (as shown in Figure 19b). Experimental data from momentary creep tests of K3B were used as the input for modeling the matrix, and the fibers were modeled as isotropic, linear elastic solids.

(a) (b)

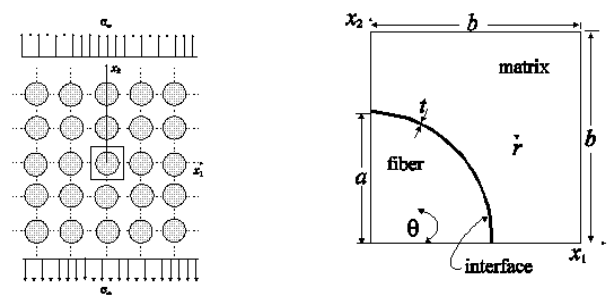

Figure 19. Transverse cross-section of the composite (a) and the quarter unit cell (b).

The long-term viscoelastic behavior of a unidirectional composite can be modeled using the momentary creep compliance experimental results from the neat matrix material. When a polymeric composite is loaded transversely in compression, the effect of using different reference curves with time/aging-time superposition is most sensitive to the physical aging shift rate at lower test temperatures. Depending on the loading mode, the reference curve used can result in a more accurate long-term prediction, especially at lower test temperatures. When longer loading times are considered, certain reference curves used with time/aging-time superposition can result in predictions that do not diverge from test data (as shown in Figure 20).

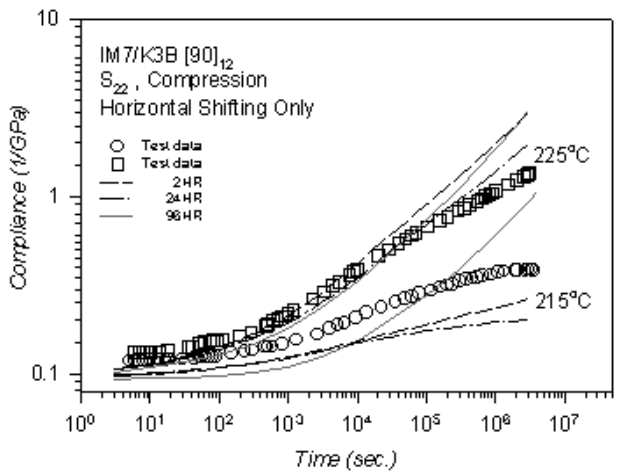

Figure 20. Test versus predictions for long-term transverse creep tests.

RELEVANCE TO NASA STRATEGIC ENTERPRISES and BENEFITS TO SOCIETY

The High Speed Civil Transport, envisioned to have a lifetime of more than 60,000 flight-hours at operating temperatures near 188° C and to travel at speeds of Mach 2, is the impetus for intensive design and development studies at NASA and major airframe developers. The results of this work are needed to demonstrate that these systems will be useful in this next generation of high-speed aircraft.

STUDENT ACHIEVEMENTS

An undergraduate student supported by this grant presented and published the results of this work at the Second NASA NANURC Conference in Albuquerque, New Mexico.

NASA Enterprise Area: Aeronautics and Space Transportation Technology
Telephone: (404) 880-6709
Fax: (404) 880-6890
E-mail: dveazie@cau.edu

Langley Research Center (Abstracts)

Visualization of Atmospheric Water Vapor Data for SAGE

Principal Investigator: Dr. Waldo J. Rodriguez
Center for Materials Research
Department of Chemistry
Norfolk State University
2401 Corprew Avenue
Norfolk, Virginia 23504
Date of Original Award: 1997

ABSTRACT OF PROPOSED RESEARCH

Real-time analysis of all the available data from satellite-based sensors would significantly advance the prediction of short- and medium-term climate changes. Timely predictions will permit proper warnings to be issued to diminish the negative impact of significant global climate changes. In the proposed work, innovative scientific visualization procedures to streamline the process of data analysis and interpretation of Stratospheric Aerosol and Gas Experiment III (SAGE III) and Stratospheric Aerosol and Gas Experiment II (SAGE II) water vapor data will be developed. This visualization procedure will fully exploit the scientific capabilities of SAGE III and SAGE II for the determination and understanding of global atmospheric water vapor dynamics and their impact on climate changes. The method will manipulate the raw data through gridding and interpolation, and it will provide various visualization perspectives, such as two-dimensional and three-dimensional animations. The images and animations will be made available to the public via the Internet and CD–ROM. The results of this work will be a positive step toward real-time data visualization, analysis, and interpretation.

The visualization procedures will be used to display SAGE II water vapor data and to establish correlations of water vapor dynamics between high and low Atlantic and eastern Pacific tropical storm activity years and El Niño-Southern Oscillation years. Storms are driven by the latent heat in atmospheric water vapor; therefore, a correlation is expected to be observed between yearly tropical storm activity and atmospheric water vapor dynamics. The occurrence of El Niño-Southern Oscillation changes the global water vapor distribution, thus having an impact on the Earth's climate. The corre-

lation between these regional climate changes and atmospheric water vapor during El Niño-Southern Oscillation years will be studied. The correlations between these phenomena and atmospheric water vapor dynamics will be used to predict future high tropical storm activity years and El Niño-Southern Oscillation events.

NASA Enterprise Area: Mission to Planet Earth
Telephone: (757) 683-2381
Fax: (757) 683-9054
E-mail: wjrodriquez@vger.nsu.edu

Characterization of Molecular Interactions at Polymer/Metal Surfaces and Interphases

Principal Investigator: Dr. Joseph C. Williams
Department of Chemistry
Hampton University
Hampton, Virginia 23668
Date of Original Award: 1997

ABSTRACT OF PROPOSED RESEARCH

Fourier Transform Infrared (FTIR) and x-ray photoelectron (XPS) spectroscopy will be used to probe the nature of chemical interactions and molecular orientations of the interphase between polymers and metals in polymer-matrix composites that have important applications in the aerospace/aeronautical field. Polyimide (developed by NASA's Langley Research Center) films on titanium alloy will be investigated using the following methodology. Titanium alloy substrates are pretreated by the Pasa-Gel process to enhance bonding; XPS will be performed to obtain the chemical composition of the substrate surface showing the presence and percentage of titanium, oxygen (native oxide surface layer), carbon (hydrocarbon film), other metals in the alloy, and any other elements that are impurities. Then, atomic force microscopy measurements on titanium alloy substrates, which yield surface topography, will give the optical constants *ns* and *ks* if the surface is reflective enough. Next, thin layers (2 to 100 nanometers) will be cast from dilute N-methylpyrolidone solutions onto the titanium alloy substrates. Finally, XPS, atomic force microscopy, and FTIR analysis of the polymer/metal films will show the surface topography, mass coverages, and structural information on chemical functionalities present in the interphase, along with variations or perturbations in the groups from bulk material to the interphase region. The molecular orientation of the polymer segment in terms of the actual angle (between parallel and perpendicular to the surface) of the metal substrate will also be determined from the surface spectroscopy measurements. These findings will have important implications for adhesion and other macroscopic behavior of high-performance materials.

NASA Enterprise Area: Aeronautics and Space Transportation Technology
Telephone: (757) 727-5429
Fax: (757) 727-5604
E-mail: joe@chem.hamptonu.edu

Lewis Research Center (Reports)

Development of Synchronously Scanned Optical Parametric Oscillator (OPO) Coherent Antistokes Ramen Spectroscopy (CARS) as a New Probe for Hostile Environments

Principal Investigator: Peter C. Chen
Chemistry Department
Spelman College
350 Spelman Lane
Box 307
Atlanta, Georgia 30314
Date of Original Award: 1996

INTRODUCTION

The primary objective of this project is to develop a new tool for probing difficult and hostile systems, such as those found during combustion in rocket engines.

RESEARCH ACCOMPLISHMENTS

This project has successfully demonstrated the capabilities of this technique for obtaining important information under difficult and challenging conditions. Two unique qualities have been demonstrated: exceptionally long scan range and the capability for rejecting large amounts of background light. These two qualities are needed to obtain speciation information in the presence of brightly illuminated systems (such as those found in combustion). These results have been published in several journals and presented at several meetings.

RELEVANCE TO NASA STRATEGIC ENTERPRISES

To expand humankind's ability to explore the universe, new and improved methods for space travel need to be developed. To improve propulsion systems, scientists and engineers need to better understand the detailed mechanisms of the relevant combustion processes. This research effort will provide for the development of a powerful new tool for propulsion combustion diagnostics.

BENEFITS TO SOCIETY

This research effort should ultimately improve the cost and efficiency of space travel, therefore making better use of taxpayer dollars. Cleaner and more efficient propulsion systems will also benefit the environment. The potential for the use of this tool in other areas is also high. Finally, this research provides a learning platform and training ground for undergraduate science majors who will contribute to science and society in the near future.

STUDENT ACHIEVEMENTS

Student achievements have included the development of new computer programs that collect data during the experiments, the design and operation of laser-based experiments, and the analysis of results. This work has culminated in student presentations on campus (winning first place in Spelman College's Science Day) and at a national conference (1997 American Chemical Society National Meeting in Las Vegas).

NASA Enterprise Area: Aeronautics and Space Transportation Technology
Telephone: (404) 223-7667
Fax: (404) 223-1449
E-mail: pcchen@spelman.edu
URL: http://www.spelman.edu/~chemistr/pchen.html/

Cubic Boron Nitride Alphavoltaic Devices

Principal Investigator: Dr. Steven M. Durbin
Department of Electrical Engineering
Florida A&M University-Florida State University
Tallahassee, Florida 32310
Date of Original Award: 1996

INTRODUCTION

The project goal is to successfully grow cubic-phase boron nitride thin-film semiconductors for the fabrication of alphavoltaic energy-conversion devices suitable for space power applications. The growth of boron nitride is challenging because of the extremely low vapor pressure of boron and the extremely large dissociation energy of molecular nitrogen. There are numerous reports of attempts at thin-film growth of cubic boron nitride in the literature using a variety of techniques, but single-phase films remain elusive. This work uses a new type of inductively coupled nitrogen plasma source to augment a pulsed laser deposition system for the growth of boron nitride thin films (see Figure 21).

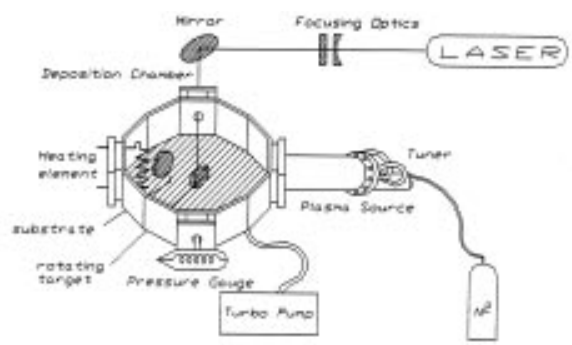

Figure 21. Schematic of the Pulsed Laser Deposition System.

RESEARCH ACCOMPLISHMENTS

The plasma source was installed after several modifications to both the source and the laser deposition chamber, and the first plasma was successfully ignited in May 1997. With the addition of the plasma source, the existing substrate mounting scheme had to be redesigned so that both the plasma and the laser-sputtered target could be directed to the substrate. Initial ablation has been performed using a variety of targets as the boron source. Initial film growth has been performed using polycrystalline diamond substrates obtained from the Research Triangle Institute, which are particu-

larly well suited for boron nitride growth. Film characterization is presently in progress in conjunction with growth parameter studies.

RELEVANCE TO NASA STRATEGIC ENTERPRISES

The fabrication of radiation-resistant semiconductor materials will permit the development of low-wattage on-chip power supplies for deep space missions where photovoltaics and batteries are not well suited.

BENEFITS TO SOCIETY

The particular material under investigation has many properties beyond those of interest for space power applications. The material has the potential for detectors and light-emitting devices in the blue and ultraviolet regions of the spectrum, and it is a candidate for electronic circuits operating in high-temperature environments, such as airplane and automobile engines. Cubic boron nitride is also a very hard material, making it useful for wear-resistant coatings.

STUDENT ACHIEVEMENTS

The work summarized in this report was performed with the assistance of one graduate student, Gregory Triplett, Jr., and several undergraduate laboratory assistants. Gregory Triplett is scheduled to graduate this fall, at which time he plans to remain as a doctoral student. He presented a poster at the 4th NASA Lewis HBCU Conference, and was coauthor of a paper presented at the 15th Space Photovoltaics Research & Technology Conference. Two undergraduate students have graduated at the time of this writing. Hubert Payne is now a research engineer for Texas Instruments, and he has just been awarded a National Science Foundation Minority Graduate Research Fellowship to pursue graduate work in electrical engineering. Christopher Watson has accepted a commission as a 2nd Lieutenant in the U.S. Air Force and began flight training school in May 1997.

Students demonstrate prealignment procedures for a laser system. The plasma source is shown in the foreground, and the Nd:YAG laser is between the students in the rear of the photo.

NASA Enterprise Area: Aeronautics and Space Transportation Technology
Telephone: (904) 487-6491
Fax: (904) 487-6479
E-mail: durbin@scri.fsu.edu

Polymerizable Monomer Reactants—Synthesis of Aryl Ethers

Principal Investigator: Dr. Danny E. Hubbard
Department of Chemistry
Grambling State University
Grambling, Louisiana 71245
Date of Original Award: 1996

INTRODUCTION

The primary focus of this research is to prepare durable, high-melting materials made from a class of chemical macromolecules known as polyamides. The modified polyamides will be used to form polymeric composites that have found significant application in the aeropropulsion industry.

RESEARCH ACCOMPLISHMENTS

This project has established a method of monomer preparation for some of the comonomer compounds that are used to make modified polyamides. Researchers have combined the monomeric, "end-capped" compounds as part of a polyamide resin with a lowered softening temperature. Current studies are under way to measure the percentage of mass lost at various elevated temperatures.

Mechanical testing techniques, such as thermogravimetric analysis, thermal mechanical analysis, and differential scanning calorimetry, have been used to measure the glass transition temperature and other physical properties of the monomers and polymers of this research investigation. Resin discs of 1-inch diameter were prepared for polyamides made from 2,2'-Bis(p-aminophenoxy) biphenyl monomer and a combination of 2,2'-Bis(p-aminophenoxy) biphenyl and para-pheneylene diamine in various ratios. Unexpected flow problems were found with resins of 2,2'-Bis(p-aminophenoxy) biphenyl as the single "endcapped" monomer. However, a promising material can be made when 2,2'-Bis(p-aminophenoxy) biphenyl is combined with para-pheneylene diamine. As a result of the synthesis efforts, relatively high glass transition temperature values have been noted for modified polyamides (for example, 340° C or 370° C). It is important to note that these glass transition temperatures are much lower than that of PMR-15, a polyamide used as a market product. One advantage of the modified polyamides from this study is that they consume less energy in processing and provide similar durability compared to the market product. In addition, surface scanning and thermal aging studies are now in progress to assess morphological integrity and thermal stability.

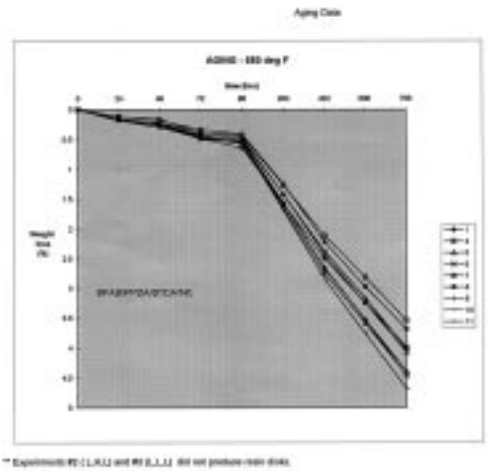

Aging data.

RELEVANCE TO NASA STRATEGIC ENTERPRISES/ BENEFITS TO SOCIETY

The major application of polymerizable monomer reactant (PMR) technology is observed in the aeropropulsion industry. Military engines and commercial vehicle engines can benefit from PMR technology. Furthermore, the use of PMR polyamides as components of commercial or military engines has shown that similar polyamides are durable to more than 100 hours of continuous use.

STUDENT ACHIEVEMENTS

Gregory Hill presented the synthesis work at the 25th Annual Conference of the National Organization for the Advancement of Black Chemists and Chemical Engineers. Jaimal Williamson, a graduating senior, has been accepted to the chemistry program at Louisiana State University and is awaiting responses from the University of Houston, Rice University, and the Georgia Institute of Technology. Jaimal Williamson also completed a successful summer internship at NASA's Lewis Research Center.

NASA Enterprise Area: Aeronautics and Space Transportation Technology
Telephone: 318 274-3718 (or 2277)
Fax: 318 274-3703
E-mail: hubbardd@medgar.gram.edu

Distributed Bragg Region Sensors with Aerospace Applications

Principal Investigator: Dr. Donald R. Lyons
Department of Physics
Hampton University
Hampton, Virginia 23668
Date of Original Award: 1994

Report not submitted.

NASA Enterprise Area: Aeronautics and Space Transportation Technology
Telephone: (757) 727-5923
Fax: (757) 727-5955
E-mail: dlyons@gprc.hamptonu.edu
URL: http://www.cs.hamptonu.edu/

Growth and Characterization of III-V Semiconductors for Device Applications

Principal Investigator: Dr. Michael D. Williams
Clark Atlanta University
Atlanta, Georgia 30314
Date of Original Award: 1996

INTRODUCTION

Molecular beam epitaxy is a nonequilibrium growth process that allows the growth of pseudo-morphic overlayers onto substrates, with which the overlayer may be mismatched by several percent points. Lattice mismatched III-V heterojunctions have many potential electronic and optical applications. An important aspect of the growth process is the quality of the interface. A nonabrupt interface or the diffusion of constituents across the interface contributes directly to alloy scattering, a loss mechanism in devices that depend on charge transport and modification of potential profiles in quantum well structures. In arsenic-based structures, it is also known that changes in the column III element/arsenic ratio can alter the reconstruction at the surface of the growth with profound consequences for the electronic structure of the material.

The research goal is to achieve a fundamental understanding of the interdiffusion of constituents at the surfaces and interfaces of epitaxially grown heterostructures. The growth of indium-gallium-arsenic-based systems is characterized by the segregation of indium at the growth front and at interfaces with other arsenides, particularly those with higher heats of formation (such as gallium) and smaller covalent radii. This segregation results in poor composition profiles and poor interracial width control. The result is the alteration of the potential energy profiles of the active layer quantum wells. This work will facilitate the development of quantum well devices and provide quantitative descriptions of key phenomena that affect their performance. The program is centered on the molecular beam epitaxy (MBE) reactor and characterization apparatus donated to Clark Atlanta University by the former AT&T Bell Laboratories. The material characterization tools employed are secondary ion mass spectrometry and photoemission spectroscopy.

RESEARCH ACCOMPLISHMENTS

This first year of the project has been spent on the installation of the materials growth, analysis systems, and related subsystems. The relevant items of interest for this project are a solid source MBE reactor for the growth of III-V (arsenides) material, a secondary ion mass spectrometer (SIMS) for depth profiling, a custom surface analysis system for Auger and photoemission spectroscopes equipped with an ultraviolet discharge lamp and a twin anodex-ray source, and a scanning electron microscope. The SIMS and photoemission systems are installed and operational. The MBE reactor has been installed and is being prepared for material growth.

RELEVANCE TO NASA STRATEGIC ENTERPRISES/ BENEFITS TO SOCIETY

A primary area of concern for the Communications Technology Division of NASA's Lewis Research Center is the long-term stability of electronic properties based on material parameters, such as aging effects. Transport devices, such as modulation-doped field effect transistors, are adversely affected by the changes in composition described above. This research will lead to a significant improvement in quality without changes in the device fabrication process.

STUDENT ACHIEVEMENTS

The training of graduate and undergraduate students is an integral part of this program. The graduate students receive a thorough exposure to state-of-the-art techniques and equipment for semiconductor materials analysis as part of the master's-degree requirement in physics. The undergraduates are exposed to a minority scientist who has an excellent track record in this area.

NASA Enterprise Area: Space Science
Telephone: (404) 880-6902
Fax: (404) 880-6720
E-mail: mdwms@cau.edu
URL: http://www.cau.edu

Turbulent Premixed Methane-Air Combustion

Principal Investigator: Dr. Yaw D. Yeboah
Department of Engineering
Clark Atlanta University
Atlanta, Georgia 30314
Date of Original Award: 1995

INTRODUCTION

The objective of this study is to enhance the understanding of the premixed combustion of methane and air under normal gravity conditions. In particular, the effects of flow rate, the equivalence ratio, and the presence of chlorinated hydrocarbons on

emissions and flame structure (shape, velocity, streamlines, and vorticities) are to be established and explained.

RESEARCH ACCOMPLISHMENTS

The specific tasks accomplished in the second year of this project included: the completion of the construction of the combustor and the development of analytical facilities; the testing of the effects of the process variables on the composition of the combustion exhaust gases, such as CO_2, CO, O_2, NO_x, and unburnt hydrocarbons; the measurement of the flow velocity distribution by using particle image velocimetry; and the study of the flow structure of cold and hot flows. The effects of process variables on the exhaust gas composition were established. For the first time, particle image velocimetry was successfully used to record and report velocity distribution, streamlines, and vorticities in premixed methane-air flames. In addition to the specially designed and fabricated combustor used in this study, several instruments have been acquired and installed in the Clark Atlanta University Combustion and Emissions Control Laboratory for this project and other applications. The leverage of resources acquired through the projects within the combustion laboratory has significantly expanded the research capabilities and focus areas of the combustion group. The enhanced capabilities of the faculty and staff in the combustion laboratory will improve the teaching and training of Clark Atlanta University engineering students in thermal sciences and will also enable Clark Atlanta University to seek future funding in combustion-related research.

RELEVANCE TO NASA STRATEGIC ENTERPRISES

This study will impact on a future microgravity study on turbulent reacting flows.

BENEFITS TO SOCIETY

The work will lead to efficient combustion and utilization of natural gas as a fuel and feedstock.

STUDENT ACHIEVEMENTS

Two undergraduate students (LaShanda James and Tamara Gray) and one graduate student (Anny Ojekwe) were supported and trained this year. They were involved in all phases of the activities. Ms. James and Ms. Gray will continue their active participation in the third and final year of the project. Ms. Ojekwe graduated recently with an M.S. in computer science and is now working at IBM. A conference paper was presented on the project at the 4th HBCU Research Conference in Cleveland, Ohio, in April 1997. In addition, a student poster was presented at Clark Atlanta University by the project undergraduate research assistants who won the second prize at the annual Clark Atlanta University Student Scientific Research Symposium.

NASA Enterprise Area: Human Exploration and Development of Space
Telephone: (404) 880-6619
Fax: (404) 880-6615
E-mail: yyeboah@cau.edu

Lewis Research Center (Abstracts)

Research to Significantly Enhance Composite Survivability at 550 Degrees F in Oxidative Environments

Principal Investigator: Dr. Laura Carson-Isabelle
Department of Chemistry
P.O. Box 2576
Prairie View A&M University
Prairie View, Texas 77446
Date of Original Award: 1997

ABSTRACT OF PROPOSED RESEARCH

High-temperature stable composite matrix resins in airframe and jet engine systems and components are desirable. The early development of these materials led to difficulties in processing at pressures less than or equal to 200 pounds per square inch. In the mid-1960's, TRW scientists discovered that prepolymers capped on both ends with a reactive addition-curing species could be readily converted to high-temperature matrix resins under practical processing conditions. This eventually led to the discovery of PMR-15. However, PMR-15 has some limitations—one being the use of methylene dianiline (MDA), which is a carcinogen and poses severe human health risks.

Thus, Prairie View A&M University is proposing that a 3-year research study be conducted to investigate chemical modifications to significantly enhance the long-term oxidative stability of PMR-15 at 550° F in air. Initially, Prairie View will select a model com-

pound, through monomer and polymer synthesis studies focused on MDA replacement using NASA's Lewis Research Center studies on 2,2-dimethvl-benzidine (DMBZ) as a baseline approach. The most promising model DMBZ derivative will be procured and synthesized. Then Prairie View will focus on the synthesis and characterization of addition-curing PMR-15-like polymers and the two most promising diamines selected previously.

NASA Enterprise Area: Aeronautics and Space Transportation Technology
Telephone: (409) 857-2616 (or 3914)
Fax: (409) 857-2095
E-mail: laura carson@pvamu.edu

Picosecond Gated Optical Imaging of Dense Fuel Sprays

Principal Investigator: Dr. Ping-Pei Ho
Department of Electrical Engineering
City College of the City University of New York
New York, New York 10031
Date of Original Award: 1997

ABSTRACT OF PROPOSED RESEARCH

A research program using picosecond time-resolved optical parametric amplification (TOPA) gates to image the spatial distribution of atomized dense-fuel sprays is proposed. This research will extend the expertise and facilities at City College of New York in ultrafast laser techniques, optical imaging in highly scattering media, and three-dimensional reconstruction. City College will develop this novel technique and construct a double jet nozzle system for time-resolved optical imaging in highly scattering media. TOPA has the advantages of simultaneously amplifying and slicing optical images on the picosecond time scale.

Picosecond time-resolved optical imaging, using the early arrived photons, provides a superior approach to obtaining direct image information through the dense-spray region by removing later-arrival scattered photons. From multiple time-resolved two-dimensional images obtained from different illumination angles, a three-dimensional image reconstruction of the spatial distribution of atomization of dense spray can be obtained. Over the past 10 years, time-resolved imaging in highly scattering media was pursued using the optical Kerr gate by the Principal Investigator and his colleagues.

In this program, a significantly better time-resolved gating method is proposed using the optical parametric amplification effect. City College will extract information from early-arrived ballistic and snake photons from dense-fuel sprays using both single and double jet nozzles. The transmitted signal through this TOPA will not only be spatially and temporally gated but also amplified. The TOPA gate (based on the second-order nonlinear optical process) can potentially reduce the gating intensity by a factor of 10^5 over the previous Kerr gating (based on the third-order nonlinear optical process). In addition, an estimated gain factor through a ß-BaB_20_4 (BBD) crystal will be greater than 10 times. The signal-to-noise ratio of the output signal will be enhanced with a TOPA gate. Diffusive noise up to approximately 10^{10} may be separated from the early-arrival image. City College also plans to investigate three-dimensional ultrafast optical imaging under different illumination directions to determine the spatial distribution of atomization and the image processing/analysis of fuel sprays.

This research will enhance several related ongoing-funded research projects at City College of New York. Furthermore, minority students will be recruited and trained in the state-of-the-art imaging technology for aeronautical engineering.

Major accomplishments planned by the end of the period will be to build and test a TOPA imaging system with time resolution approximately 1-ps and a gain factor greater than 10, to measure the spatial distribution of modeled jet fuel spray in the dense region with less than 10-µm spatial resolution, and to develop a three-dimensional reconstruction algorithm to determine the fuel droplet size and shape from multiple TOPA images illuminated from different directions.

NASA Enterprise Area: Aeronautics and Space Transportation Technology
Telephone: (212) 650-6808
Fax: (212) 650-5530
E-mail: ho@photonicsmail.sci.ccny.cuny.edu

Marshall Space Flight Center (Reports)

Atomization in Impinging-Jet Injectors of Liquid-Propellant Rocket Engines

Principal Investigator: Dr. Essam A. Ibrahim
Department of Mechanical Engineering
Tuskegee University
Tuskegee, Alabama 36088
Date of Original Award: 1996

INTRODUCTION

The impinging-jet atomizer affords a convenient means of controlling the drop size and spatial distribution of a spray and has found widespread applications. It is particularly suited to liquid-propellant rocket engines where intimate mixing of reactants may be easily achieved by the impingement of fuel and oxidant jets. The main objective of this project is to develop a theoretical model that accurately characterizes the physical mechanisms responsible for the atomization phenomenon. This model will be used to effect predictions of the penetration depth, breakup time, drop size, and orientation of the spray produced by the impinging jets.

RESEARCH ACCOMPLISHMENTS

The research is focused on the application of nonlinear instability theory to predict the spray characteristics of the impinging-jet injector. It is well known that the impingement of two cylindrical coplanar jets of equal diameters and momenta (like-on-like doublet) produces an expanding sheet in the plane at right angles to the plane containing their axes. The processes of instability and subsequent breakup of the sheet dictate the outcome of atomization. A second-order perturbation analysis was employed to investigate the growth of the asymmetrical disturbances that lead to the disintegration of an attenuating liquid sheet similar to the sheet produced by impinging injectors. It was found that the disturbance growth corresponds to a combination of a basic sinuous mode and a dilatational first harmonic. As a result, wave growth is asymmetric, and the sheet progressively diminishes in thickness. The sheet breaks up into ligaments of half-wavelength size. A model was developed to yield estimates of the breakup length of the sheet at different Weber numbers. Favorable agreement was observed between the present computations model and existing experimental data and empirical correlations.

RELEVANCE TO NASA STRATEGIC ENTERPRISES

The theory and predictions of this work are imperative to allow for accurate numerical simulations of the combustion processes that take place in liquid-propellant rocket engines. The characteristics of the instability and atomization in the impinging-jet atomizer are also of importance for the design of fan-spray nozzles, which operate on a similar principle.

BENEFITS TO SOCIETY

This work contributes to a better understanding of fuel-injection and atomization processes, which may lead to improved combustion efficiency and hence a reduction in fuel consumption and pollutant emissions.

STUDENT ACHIEVEMENTS

Six minority students—two graduate and four undergraduate—are involved in this project. Daryl Marshall and Ivan Morrison received BSME degrees in May 1997. Daryl Marshall is now pursuing his MSME at Tuskegee University. Ivan Morrison is working in industry. Shawn Marshall is expected to receive his MSME in May 1998 and to continue his graduate studies toward a Ph.D. Most of the research conducted in this project has been performed by the students, and this has resulted in one national conference presentation and one published paper.

NASA Enterprise Area: Human Exploration and Development of Space and Aeronautics and Space Transportation Technology
Telephone: (334) 727-8974
Fax: (334) 727-8090
E-mail: emmi@acd.tusk.edu

3-D Multiphase-Flow Modeling of Oxygen Flow Systems

Principal Investigator: Dr. Ian H. Leslie
Department of Mechanical Engineering
New Mexico State University
Las Cruces, New Mexico 88003
Date of Original Award: 1996

INTRODUCTION

The major research objective is to develop a fully three-dimensional fluid mechanical model of the supersonic velocity impact nozzle used at the White Sands Test Facility of NASA's Johnson Space Center. This tester is instrumental in determining what materials can be safely used in high-pressure, high-temperature oxygen systems. The systems of particular interest are the Space Shuttle Main Engines and life support for astronauts. The model developed must address compressibility, turbulence, and entrained particles. A successful model will help in assessing both conditions within the tester and possible design improvements. A longer term goal is to apply knowledge gained through modeling the tester to other oxygen systems, such as pressure regulators.

RESEARCH ACCOMPLISHMENTS

A commercial code was applied to the modeling of the tester. Calculations were successfully carried out for inlet pressures from 1.5 to 28 MPa, and inlet temperatures from 293° K to 700° K. In every case, it was found that flow separation was predicted upstream of the target material being tested. This flow separation does not seem to interfere with the test directly; rather, the separation may prevent the application of a useful optical diagnostic. The personnel at the White Sands Test Facility tried to determine particle velocities just prior to impact. Uncontrolled scattering of the laser beam made this impossible. Model results suggest that high levels of turbulence in the separation zone are the cause. Several calculations were carried out with modified nozzle geometry to determine whether the separation could be eliminated. A successful solution was found that will be tested at the White Sands Test Facility.

RELEVANCE TO NASA STRATEGIC ENTERPRISES

The successful modeling of the supersonic tester directly supports efforts at the White Sands Test Facility. To date, testing has been primarily comparative, determining which materials are more or less prone to burning. With the model now available, modifications that will improve data-gathering performance are possible. In addition, this model is a first step at a larger modeling effort that will be used to predict the ignition from particle impact. Design strategies to minimize such dangers will then be possible.

BENEFITS TO SOCIETY

Oxygen systems are widely used in the public domain, both in industry and in medicine. Cases of fires in oxygen regulators have resulted in injury. The present model could be adapted to the design of safer regulators.

STUDENT ACHIEVEMENTS

One undergraduate and two graduate students were involved with the project. Two of the students are now employed in the aerospace industry, where computational fluid dynamic efforts are common. One student has continued similar work for his employer. The third student is still in school pursuing studies in the fluid mechanics area. This student is helping to prepare a paper that will be presented at a joint ASME/JSME conference next year.

NASA Enterprise Area: Human Exploration and Development of Space
Telephone: (505) 646-2335
Fax: (505) 646-6111
E-mail: ileslie@nmsu.edu

Object-Oriented Software Control Architecture for Robotic Vehicles

Principal Investigator: Dr. Michael L. Nelson
Department of Computer Science
University of Texas–Pan American
Edinburg, Texas 78539
Original Date of Award: 1996

INTRODUCTION

The purpose of this project is to develop the Strategic-Tactical-Execution Software Control Architecture (STESCA). STESCA is intended to be a "general" control approach that can be used on any type of robotic vehicle. The initial test bed vehicle is the Phoenix Autonomous Underwater Vehicle (AUV) at the Naval Postgraduate School (Monterey, California). STESCA will then be developed for a land-based wheeled robotic vehicle.

RESEARCH ACCOMPLISHMENTS

The Naval Postgraduate School AUV simulator has been installed at the University of Texas–Pan American. The strategic-level mission specification system has been completed. The development of

the tactical-level mission execution system has begun (the actual vehicle component control commands comprise the execution level, so no further development is necessary). One technical report has been produced ("An Introduction to Object-Oriented Programming," University of Texas–Pan American CS-97-13, January 1997). Two technical papers were submitted and accepted ("An Object-Oriented Approach to Autonomous Underwater Vehicle Control," 10th International Symposium on Unmanned Untethered Submersible Technology, September 1997, and "A Software Control Architecture for Autonomous Vehicles," 31st Hawaii International Conference on System Sciences, January 1998).

RELEVANCE TO NASA STRATEGIC ENTERPRISES

Because STESCA is intended to be a "general" control system that can be used on any type of robotic vehicle (sea, land, air, or space), this project has relevance to the use of robots in all of NASA's Strategic Enterprises.

BENEFITS TO SOCIETY

Besides better preparing minority students for careers in science, one of the major goals of this project is to create an easy-to-use robotic control system. While it may take a team of scientists and engineers to create and maintain such a vehicle, it should not take such a team to use the vehicle on a daily basis.

STUDENT ACHIEVEMENTS

One student-authored paper was submitted and accepted ("Overview of Path Planning Algorithms for Autonomous Vehicles," 10th International Symposium on Unmanned Untethered Submersible Technology, September 1997). Another student received a Certificate of Academic Achievement for work on the project. Two students have completed independent study projects. In addition, two students have submitted abstracts to an upcoming student research conference.

NASA Enterprise Area: Space Science
Telephone: (210) 381-3520
Fax: (210) 384-5099
E-mail: nelson@cs.panam.edu

Health Monitoring of Composite Material Structures Using a Vibrometry Technique

Principal Investigator: Dr. Mark J. Schulz
Structural Dynamics and Control Laboratory
Department of Mechanical Engineering
North Carolina A&T State University
Greensboro, North Carolina 27411
Date of Original Award: 1996

INTRODUCTION

Large metallic/composite structures, such as aircraft and reusable launch vehicles (RLV), operate in severe environments composed of vehicle dynamic loads, aerodynamic loads, engine vibration, foreign object impact, lightning strikes, corrosion, and moisture absorption. To ensure human safety and load-bearing integrity, these structures must be inspected to detect and locate nearly invisible cracking, delamination, and other faults before they propagate and become catastrophic. It is predicted that nearly all future aerospace vehicles will need some type of inservice inspection technique to increase their useful life and reduce costs. Conventional techniques for health monitoring of composite structures have limitations in detecting damage that is beneath the surface of the structure, far away from a sensor location, or during operation of the vehicle. The objective of this project is to develop a more global method of damage detection for ground-based inspection and operational health monitoring of large composite material (such as graphite-epoxy and fiberglass) structures. An approach based on structural dynamics principles is being tested that uses measured transmittance functions to monitor how vibration is transmitted through a structure. This method can expose faults not evident by static inspection, and this capability may lead to a new condition-based approach to maintenance that reduces life-cycle costs and increases the safety of aerospace vehicles.

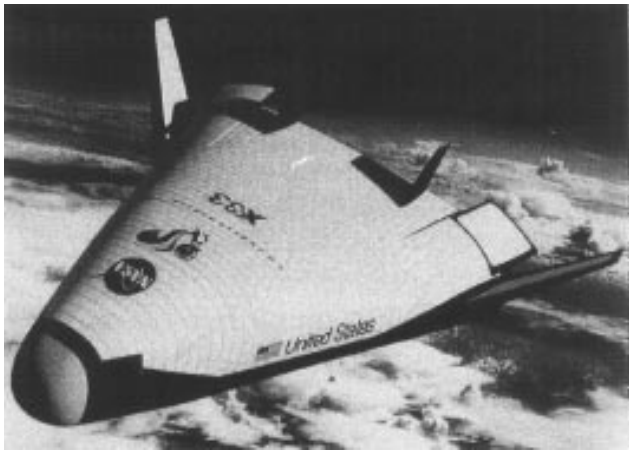

Reusable launch vehicle application for health monitoring.

RESEARCH ACCOMPLISHMENTS

Computer simulations have been performed in which the transmittance function method was used to detect damage to an analytical model of a fiberglass beam. These simulations showed that the transmittance function method is very sensitive and can detect small damage, but finding the exact location of the damage depends on the spatial position and number of sensors on the structure. The effects of structural geometry, measurement frequency range, and changes in temperature on the accuracy of damage detection have been initially investigated. Experiments were performed to detect damage to fiberglass structures. The testing successfully detected different types of damage to a flat plate, beam, and curved panel in a laboratory environment. Testing will be performed for longer time periods and on larger structures to further verify the technique.

RELEVANCE TO NASA STRATEGIC ENTERPRISES

The research in health monitoring is important for the development of an RLV that can replace the Space Shuttle and reduce launch and maintenance costs while increasing payload. An RLV known as the X-33 is being developed by Lockheed Martin and NASA's Marshall Space Flight Center. This structure will use a large percentage of composite materials, and it will incorporate a vehicle health management system. The algorithms developed in this project could become part of this vehicle health management system. The work in this project is also applicable to vehicle health management systems under development for aircraft, rotorcraft, and space vehicles at other NASA Centers.

BENEFITS TO SOCIETY

Health monitoring technology can make flight vehicles, bridges, buildings, and other mechanical and structural systems more reliable, less expensive, and safer. A miniature sensor-processor system installed on a structure can monitor its condition. When a problem arises, the system alerts the operator, and the problem is corrected in the initial stage before becoming severe. This approach can increase safety by avoiding catastrophic problems and reduce costs by eliminating unnecessary maintenance. Health monitoring based on dynamics theory is currently being applied to "simple" mechanical systems and, in the future, may progress to complex environmental and biological systems or humans.

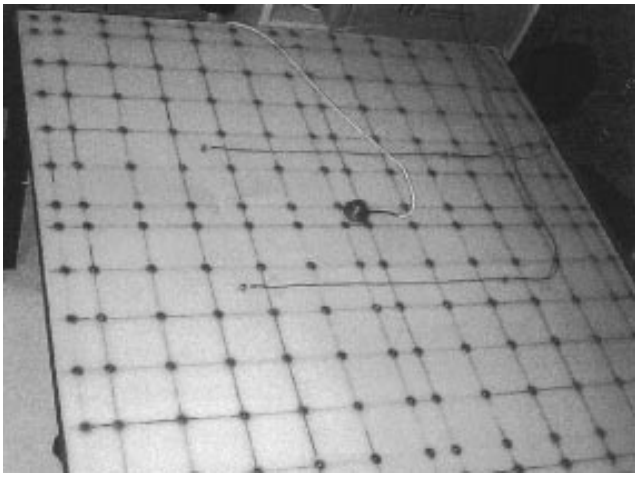

Health monitoring experiment using a composite material panel.

STUDENT ACHIEVEMENTS

Students in the project are gaining a strong background in theory, experimental procedures, use of instrumentation, technical paper writing, and the presentation of results at technical meetings. This research experience greatly improves the capability of new engineers to develop innovative solutions to the difficult technical challenges in the world.

NASA Enterprise Area: Aeronautics and Space Transportation Technology
Telephone: (910) 334-7620, ext. 313
Fax: (910) 334-7417
E-mail: schultz@ncat.edu

Marshall Space Flight Center (Abstracts)

NLO Polymers That Have Enhanced Thermal Stability and Low Alignment Decay and the Use of Microgravity to Optimize NLO Properties

Principal Investigator: Dr. Connie Walton
Department of Chemistry
Box 4218
Grambling State University
New Orleans, Louisiana 71245
Date of Original Award: 1997

ABSTRACT OF PROPOSED RESEARCH

This project focuses on the synthesis of nonlinear optical (NLO) materials that have enhanced thermal stability and low-alignment decay. This project fits well with NASA's mission to develop devices that utilize NLO materials. One such device is a spatial light modulator, which could be beneficial in communicating with satellites deployed in space. The proposed project also meshes with NASA's microgravity effort; this environment is being explored as a way to optimize the NLO efficiency of materials.

In this project, fluorine derivatives will be synthesized and their NLO properties characterized. The fluorine molecule will be functionalized so that it contains an electron-donating and an electron-accepting group; consequently, the second-order NLO effect will be observed. Vapor deposition will then be used to obtain crystals of this compound, and its electro-optical coefficient will be determined. The fluorine compound will then be incorporated into polymer structures, with the objective being to obtain a material that is stable to high temperatures and has minimum alignment decay. Two types of polymers will be synthesized, polyamides and polyimides. Thin films of polymers will be formed in a microgravity environment and then aligned using electric poling.

NASA Enterprise Area: Aeronautics and Space Transportation Technology and Human Exploration and Development of Space
Telephone: (318) 274-6202
Fax: (318) 274-3703
E-mail: Walton@Vax0.gram.edu

Stennis Space Center (Reports)

Optimal Rate Concept Acquisition for Classification of Remotely Sensed Spatial Data and Propulsion Test Data

Principal Investigator: Dr. Willie G. Brown
Department of Computer Science
Jackson State University
Jackson, Mississippi 39217
Date of Original Award: 1994

INTRODUCTION

Image processing is the manipulation and interpretation of digital images using a computer. One image-processing task involves classification, which is the process of assigning the pixels of an image (the most elemental component of the image, sometimes called a raster) to one of several land-cover classes or thematic categories. This technique provides a quantitative method for automating the identification of features in a scene. The main objective of this research is to investigate and demonstrate the use of artificial intelligence expert system technology for the classification task. The overall research effort includes surveys and evaluations of expert system shells, surveys and evaluations of knowledge discovery techniques for uncovering relationships in raw data, and the implementation of prototype classification systems.

RESEARCH ACCOMPLISHMENTS

A machine-learning technique, which combines the version space method for concept acquisition and the genetic algorithm technique for optimization, has been implemented. This technique, called optimal rate concept acquisition, not only produces descriptions of classes, but also suggests the best examples of raw data to use for training the classification system. Testing has shown the accuracy rate for the version space classifier to be comparable to other classification systems (such as neural network systems). However, the version space systems can be trained using far less data than other classifiers and produce descriptions of the data that can be easily understood by humans.

RELEVANCE TO NASA STRATEGIC ENTERPRISES

NASA has, and will continue to collect, vast amounts of remotely sensed spatial data. However, much of this digital data are unidentified and

therefore unusable in their present form. This project addresses a technical problem that is vital to NASA's Mission to Planet Earth: analyzing, classifying, and extracting useful and usable information from the vast amounts of data that will be generated by the Earth Observing System (EOS).

NASA Enterprise Area: Aeronautics and Space Transportation Technology and Mission to Planet Earth

Telephone: (601) 968-2105
Fax: (601) 968-2478
E-mail: wbrown@stallion.jsums.edu
URL: http://www.jsums.edu/

Labile and Stable Soil Organic Carbon Pools Revealed by C-14 and C-13 Signatures

Principal Investigator: Dr. Yuch Ping Hsieh
Wetland Ecology, CESTA
Florida A&M University,
Tallahassee, Florida 32307
Date of Original Award: 1996

INTRODUCTION

The amount of soil organic carbon is currently about twice that of the atmosphere. The exchange and turnover of carbon between soils and the atmosphere are of great consequence and concern to the global carbon cycle and global warming effects. Unfortunately, the dynamics of soil organic carbon turnover is complicated and not really understood. This project takes advantage of the bomb radiocarbon in the atmosphere since the 1960's and the distinct C-13 signature of C3 and C4 plants to infer the soil organic carbon dynamics in the North American grasslands. The results will be used to calibrate soil organic carbon models of North America, which will improve our understanding on the sink/source relationship between soil and atmospheric carbon.

RESEARCH ACCOMPLISHMENTS

Researchers have refined their bomb radiocarbon model, which can be used to trace the sizes and turnover times of ecologically important soil carbon pools that are too young to be dated by conventional carbon dating. Representative soil samples from Montana and Nebraska have been taken and analyzed. A manuscript is being prepared for publication in a refereed technical journal.

RELEVANCE TO NASA STRATEGIC ENTERPRISES

Understanding the role of soil organic carbon dynamics in the global ecosystems is an important research topic and one that is being addressed within NASA's Mission to Planet Earth. Many NASA-funded projects measure and model carbon dynamics. Almost all models use the labile and stable soil organic carbon concept, but without real data for calibration. This project will greatly improve the design and calibration of those models.

BENEFITS TO SOCIETY

The evidence of global warming is practically undeniable. Finding a way to control the ever-increasing carbon dioxide concentration in the atmosphere is a great international challenge. This research will improve our understanding of the role of soils in global carbon cycles. Knowledge about the dynamics of soil organic carbon in response to land use and management will provide us with the necessary strategies to control carbon dioxide concentration in the atmosphere.

STUDENT ACHIEVEMENTS

Three students have been involved in this project, and all have received hands-on experience in simulation modeling of ecosystem carbon cycles.

NASA Enterprise Area: Mission to Planet Earth

Telephone: (904) 599-3065
Fax: (904) 561-2221
E-mail: hsieh@nsl.famu.edu

A Study of the Fluid Mechanics of Reacting Flows in Selected Aerospace Propulsion Devices

Principal Investigator: Dr. Eric J. Sheppard
Aerospace Science Engineering Department
Tuskegee University
Tuskegee, Alabama 36088
Date of Original Award: 1994

INTRODUCTION

Many reacting flow problems are of interest to the aerospace community. These include the ionization of plasmas in electromagnetic and electrothermal space thrusters. This research project addresses some of these topics specifically and then formu-

lates a parameterized generic mixing/reaction problem, which contains the flows of interest as a subset. This generic problem can be used to identify similarities and differences between well-understood flows and problems that are more poorly understood.

RESEARCH ACCOMPLISHMENTS

The research project addresses one-dimensional steady reacting flows. While some of these flow situations can be solved analytically, those that are too complicated for analytic solution will instead be simulated on computers. The flows being addressed are the ionizing flows in electromagnetic and electrothermal accelerators used as space thrusters. The plasma analogy to lean blowout in combustion is currently being analyzed further as a description of "ionizational ignition." In support of this analysis, the reaction rate models to be used have been further developed and documented. In particular, compact ionization models, which include the effects of multiple excited states, have been explored. Compact models allow accurate collision rates to be included in computational models efficiently and allow for predictions of the emission radiation spectrum, which will support experimental diagnostics for plasma thrusters.

An additional study of the near-cathode zone of a plasma thruster is being examined. The goal is to identify the source of electrons in this region—diffusion from the bulk flow, volumetric production in the near-cathode region, or the cathode wall itself (which is a sign of erosion).

A paper has been completed on the topic of compact ionization models and submitted for publication. Another paper on diffusing and reacting flows at the inlets of plasma thrusters has also been submitted. Preliminary discussions have been initiated with NASA's Stennis Space Center technical personnel concerning the identification of a topic for a competitive proposal to be written in the winter of 1997 and the spring of 1998.

RELEVANCE TO NASA STRATEGIC ENTERPRISES/ BENEFITS TO SOCIETY

This work supports studies at NASA and elsewhere in the area of space propulsion. Plasma thrusters are attractive candidates for a variety of space missions, from satellite station-keeping to deep space missions. An improved understanding of the physics in these thrusters may lead to better efficiencies and more effective choices for various space propulsion needs.

STUDENT ACHIEVEMENTS

Two undergraduate students worked on this research project during each academic term. These students assisted in collecting references, programming, and setting up the computations required in this project. During the past year, the students have started adapting the reaction rate calculations to the MATLAB programming environment. Both students currently employed will graduate during this academic year.

NASA Enterprise Area: Aeronautics and Space Transportation Technology
Telephone: (334) 727-8851
Fax: (334) 727-8090
E-mail: sheppard@tusk.edu

Stennis Space Center (Abstracts)

Analysis of the Inherent and Apparent Optical Properties in Case 1 and Case 2 Waters of the Caribbean Sea

Principal Investigator: Dr. Roy A. Armstrong
Department of Marine Sciences
P.O. Box 5000
University of Puerto Rico at Mayagüez
Lajas, Puerto Rico 00681
Date of Original Award: 1997

ABSTRACT OF PROPOSED RESEARCH

To better understand the role of tropical oceans in climate and global change, it is necessary to use tools that allow for large-scale assessments. Remote sensing of ocean color provides the capability of studying phytoplankton communities on a large scale. However, the spatial and temporal variability of inherent and apparent optical properties makes the interpretation of remote-sensing data very difficult. This project proposes to characterize the variability of these optical properties and to identify the different bio-optical provinces using the Caribbean Sea as an example. The researchers intend to develop a better approach to interpreting both the remote-sensing data of tropical oceans and the role of tropical phytoplankton in global change. The

proposed project will include field and laboratory work in conjunction with remote-sensing data collection. The existing collaboration with other scientists from Puerto Rico, other Caribbean countries, and the United States will provide the avenues to develop this project.

The proposed research will produce important benefits to phytoplankton ecology and remote-sensing applications in tropical areas, among which are: (1) interpreting the processes that affect the inherent and apparent optical properties in tropical oceans; (2) assessing the spatial and temporal variations of tropical phytoplankton communities; (3) creating an unique, comprehensive bio-optical field data set for tropical waters that will help in developing better bio-optical algorithms for remote-sensing applications; and (4) developing a better understanding of the role of tropical phytoplankton communities in the global carbon cycle.

NASA Enterprise Area: Mission to Planet Earth
Telephone: (787) 899-6875
Fax: (787) 899-5500
E-mail: neptune@caribe.net

Partnership Awards

Partnerships between the NASA Installations and minority universities have great potential to further the ongoing mission of NASA and to assist in developing a diverse community of research institutions with a significant percentage of socially and economically disadvantaged students. The Partnership Award is designed to create and strengthen such partnerships. Projects supported are unique and innovative, and they fall outside of NASA's usual competitive programs. These projects show evidence of having high potential for long-term support from other sources. Special efforts are made to include outreach to individuals with disabilities and to public schools with enrollments of predominately socially and economically disadvantaged students.

Partnership Awards are funded for no more than 2 years, at a maximum of $200,000 per year for each participant minority institution. Second-year funds are contingent on the successful completion of the first year's activities. The NASA Installations and minority institutions' partners are expected to leverage the impact of the award with other funding.

Awards are made in three categories: education, research, and a combination of education and research. Education awards are made in support of such endeavors as precollege projects, bridge projects, course and curriculum development projects, and/or projects that expand the understanding and use of education technology. Research awards are made to cover a wide spectrum of research that is of interest to NASA. Combination awards are made to projects that skillfully combine activities in both the research and education areas. During the current reporting year, 15 education awards, 18 research awards, and 32 combination awards were made.

A list of education project awards made during the current reporting period can be found in a companion report by the NASA Office of Equal Opportunity Programs/Minority University Research and Education Division titled *Education and Training Report—1997.* A list of research project awards and combination research and education project awards made during the current reporting period follows.

Research Partnerships

Ames Research Center

Solar Ultraviolet-R Radiation and Public Health in Puerto Rico

Principal Investigator: Dr. Jaime Matta
Department of Pharmacology and Toxicology
Ponce School of Medicine
P.O. Box 7004
Ponce, Puerto Rico 00732

NASA Enterprise Area: Mission to Planet Earth
Telephone: (787) 259-7025
Fax: (787) 259-7025
E-mail: 103650.1713@compuserve.com

Verification of NASA Mission-Critical Software Without Sacrificing Performance

Principal Investigator: Dr. Patricia Teller
Computer Science Department
University of Texas at El Paso
500 West University Avenue
El Paso, Texas 29968-0518

NASA Enterprise Area: Mission to Planet Earth
Telephone: (915) 747-5939
Fax: (915) 747-5030
E-mail: pteller@cs.utep.edu

Dryden Flight Research Center

Computer Simulation of Multidisciplinary Engineering

Principal Investigator: Dr. Chivey Wu
Mechanical Engineering Department
California State University, Los Angeles
5151 State University Drive
Los Angeles, CA 90032

NASA Enterprise Area: Aeronautics and Space Transportation Technology
Telephone: (213) 343-4489
Fax: (213) 343-4555
E-mail: cwu@calstatela.edu

Goddard Space Flight Center

Novel Methods of Fabrication and Evaluation of Room Temperature X-Ray and Gamma Ray CdZnTe Detectors

Principal Investigator: Dr. Arnold Burger
Physics Department
P.O. Box 15
Fisk University
1060 17th Avenue
Nashville, Tennessee 37208

NASA Enterprise Area: Space Science
Telephone: (615) 329-8516
Fax: (615) 329-8634
E-mail: aburger@dubois.fisk.edu

Laboratory Study of the Behavior of Saturated Sedimentary Material

Principal Investigator: Dr. Donald Helm
School of Engineering
Cold Spring Lane @ Hillen Road
Morgan State University
Baltimore, Maryland 21239

NASA Enterprise Area: Mission to Planet Earth
Telephone: (410) 319-3184
E-mail: helm@eng.morgan.edu

The Magnetic Transport & Structural Properties of Pulsed Laser Deposited Magnetic Oxide Films

Principal Investigator: Dr. Conrad Williams
Department of Physics
Morgan State University
Calloway Hall 210
1700 Cold Spring Lane
Baltimore, Maryland 21251

NASA Enterprise Area: Space Science
Telephone: (410) 319-3149
Fax: (410) 319-3963
E-mail: williams@anvil.nrl.navy.mil

Jet Propulsion Laboratory

Real-Time Prototyping Project

Principal Investigator: Dr. John S. Hurley
Department of Engineering
Clark Atlanta University
223 James P. Brawley Drive, S.W.
Atlanta, Georgia 30314

NASA Enterprise Area: Space Science
Telephone: (404) 880-6983
Fax:
E-mail: jhurley@cau.edu

Johnson Space Center

Caffeine Metabolism: The Pharmacokinetics of Space Flight

Principal Investigator: Dr. Marguerite Coomes
Department of Biochemistry and Molecular Biology
Howard University
520 W Street, N.W.
Washington, D.C. 20059

NASA Enterprise Area: Human Exploration and Development of Space
Telephone: (202) 806-9760
Fax: (202) 806-5784
E-mail: mcoomes@fac.howard.edu

Kennedy Space Center

Sweetpotato Stem Cuttings Database in Preparation for Flight

Principal Investigator: Dr. Desmond G. Mortley
Department of Agricultural Sciences
Tuskegee University
214 Milbank Hall
Tuskegee, Alabama 36088

NASA Enterprise Area: Human Exploration and Development of Space
Telephone: (334) 727-8404
Fax: (334) 727-8552
E-mail: dmortley@acd.tusk.edu

Langley Research Center

Mixing Noise and Thrust Benefits Using Corrugated Designs

Principal Investigator: Dr. Samuel G. White
School of Engineering and Technology
Hampton University
Hampton, Virginia 23668

NASA Enterprise Area: Aeronautics and Space Transportation Technology
Telephone: (757) 728-6970
Fax: (757) 728-6972
E-mail: sgw@et.hamptonu.edu

Lewis Research Center

Ultra Sensitive Optical Strain Gauges for Plume Inpingement Studies

Principal Investigator: Dr. Donald Lyons
Department of Physics
Hampton University Research Center for Optics
Hampton, Virginia 23668

NASA Enterprise Area: Aeronautics and Space Transportation Technology
Telephone: (757) 727-5923
Fax: (757) 727-5955
E-mail: dlyons@gprc.hamptonu.edu

Aerothermo Structural Analysis of Low Cost Composite Nozzle/Inlet Components

Principal Investigator: Dr. Kunigal N. Shivakumar
North Carolina A&T State University
Greensboro, North Carolina 27411

NASA Enterprise Area: Aeronautics and Space Transportation Technology
Telephone: (910) 334-7411
Fax: (910) 334-7417
E-mail: kunigal@garfeild.ncat.edu

Radiation Effects on DC-DC Converters

Principal Investigator: Dr. John O. Attia
Department of Electrical Engineering
Prairie View A&M University
P.O. Box 397
Prairie View, Texas 77446
NASA Enterprise Area: Aeronautics and Space Transportation Technology
Telephone: (409) 857-3923
Fax: (409) 857-4780
E-mail: jattia@ee.pvamu.edu

Experimental Evaluation of Motor Drive Technologies for Future Aerospace Applications

Principal Investigator: Dr. Ahmed Rubaai
Department of Electrical Engineering
Howard University
2300 6th Street, N.W.
Washington, D.C. 20059

NASA Enterprise Area: Aeronautics and Space Transportation Technology
Telephone: (202) 806-5767
Fax: (202) 806-5258
E-mail: rubaai@scs.howard.edu

Marshall Space Flight Center

An Unconventional Three-Dimensional Computation of Transition Aerodynamics for RLV

Principal Investigator: Dr. Goang S. Liaw
Department of Civil Engineering
Alabama A&M University
P.O. Box 367
Normal, Alabama 35762

NASA Enterprise Area: Human Exploration and Development of Space
Telephone: (205) 851-5565
Fax: (205) 851-5909
E-mail: aamgsl01@asnaam.aamu.edu

Novel Method for Evaluation of Uniformity and Structural Homogeneity of Ternary Wide Gap Semiconductors

Principal Investigator: Dr. Arnold Burger
Physics Department
Fisk University
1000 17th Avenue
P.O. Box 15
Nashville, Tennessee 37208

NASA Enterprise Area: Human Exploration and Development of Space
Telephone: (615) 329-8516
Fax: (615) 329-8634
E-mail: aburger@dubois.fisk.edu

Telemedicine and Rapid Identification of Microorganisms by Fourier Transform Infrared Spectroscopy

Principal Investigator: Dr. J. Caulfield
Physics Department
Fisk University
1000 17th Avenue North
Nashville, Tennessee 37208

NASA Enterprise Area: Human Exploration and Development of Space
Telephone: (615) 329-8622
Fax: (615) 329-8634
E-mail: hjc@dubois.fisk.edu

Composite Truss Design Optimization

Principal Investigator: Dr. Cheng-Shung Wang
Mechanical Engineering Department
Southern University
Baton Rouge, Louisiana 70813

NASA Enterprise Area: Human Exploration and Development of Space
Telephone: (504) 771-4701
Fax: (504) 771-4877
E-mail: wang@engr.subr.edu

Integrated Approach to the Prediction of Hyperpolarizability of Organic Crystals

Principal Investigator: Dr. Beatriz Cardelino
Box 238
Spelman College
Atlanta, Georgia 30314

NASA Enterprise Area: Human Exploration and Development of Space
Telephone: (404) 215-7731
Fax: (404) 525-7377
E-mail: cardelino@ssl.msfc.nasa.gov

Analysis of Friction Stir

Principal Investigator: Dr. John McClure
University of Texas at El Paso
El Paso, Texas 79968-0518

NASA Enterprise Area: Aeronautics and Space Transportation Technology
Telephone: (915) 747-6933
Fax: (915) 747-8036
E-mail: McClure@utep.edu

Research and Education Partnerships

Ames Research Center

Motion Planning in a Society of Intelligent Mobile Agents

Principal Investigator: Dr. Albert Esterline
Computer Science Department
121 Graham Hall
North Carolina A&T State University
Greensboro, North Carolina 27411

NASA Enterprise Area: Aeronautics and Space Transportation Technology
Telephone: (910) 334-7245
Fax: (910) 334-7244
E-mail: esterlin@ncat.edu

Training Under-Represented Students in Biological Research at Fisk University

Principal Investigator: Dr. Muthukumaran Gunasekaran
Fisk University
1000 17th Avenue
P.O. Box 3
Nashville, Tennessee 37208

NASA Enterprise Area: Space Science
Telephone: (615) 329-8728
Fax: (615) 329-8677
E-mail: mguna@dubois.fisk.edu

Air Traffic Control Using Neural Networks: A Proposal for Research and Educational Enhancement

Principal Investigator: Dr. S.K. Trivedi
P.O. Box 9221
Southern University
Baton Rouge, Louisiana 70813
NASA Enterprise Area: Aeronautics and Space Transportation Technology
Telephone: (504) 771-2060
Fax: (504) 771-4223
E-mail: trivedi@mail.cmps.subr.edu

Dryden Flight Research Center

Artificial Potential Field Based Motion Planning/Navigation in Two and Three Dimensional Dynamic Environments

Principal Investigator: Dr. Jeffrey Clouse
Computer Science Department
207 Graham Hall
North Carolina A&T State University
Greensboro, North Carolina 27411

NASA Enterprise Area: Space Science
Telephone: (910) 334-7245
Fax: (910) 334-7244
E-mail: clouse@ncat.edu

Goddard Space Flight Center

Partnership for Space Telecommunications Education

Principal Investigator: Dr. Rafael Fernandez-Sein
Department of Electrical and Computer Engineering
University of Puerto Rico
Mayagüez, Puerto Rico 00681

NASA Enterprise Area: Mission to Planet Earth, Space Science
Telephone: (787) 834-7620, ext. 2263
Fax: (787) 832-2485
E-mail: rafaelf@exodo.upr.clu.edu

Medgar Evers College Ocean and Environmental Science Research Program

Principal Investigator: Dr. Leon Johnson
Department of Physics
CUNY–Medgar Evers College
1650 Bedford Avenue
Brooklyn, New York 11225
NASA Enterprise Area: Mission to Planet Earth
Telephone: (718) 270-6462
Fax: (718) 243-5496
E-mail: ljome@cunyvm.cuny.edu

Preservation of the Environment Through Education & Research on Remote Sensing of the Atmosphere & of Land Use/Land Cover Changes

Principal Investigator: Dr. Reza Khanbilvardi
School of Engineering
City College of the City University of New York
T-107 Steinmann Hall
New York, New York 10031

NASA Enterprise Area: Mission to Planet Earth
Telephone: (212) 650-8009
Fax: (212) 650-8097
E-mail: rk@ce-mail.engr.ccny.cuny.edu

CSTEA HBCU Academic and Research Consortium (CHARC)

Principal Investigator: Dr. Arthur N. Thorpe
Director, Center for the Study of Terrestrial and Extra-terrestrial Atmospheres
Howard University
2216 6th Street, N.W.
Room 103
Washington, D.C. 20059

NASA Enterprise Area: Mission to Planet Earth
Telephone: (202) 806-5172
Fax: (202) 806-4430
E-mail: thorpe@cstea.cstea.howard.edu

Partnership Award with Minority Universities and Colleges

Principal Investigator: Dr. Gloria Wyche-Moore
University of the District of Columbia
4200 Connecticut Ave, N.W.
Building 48, Room 565
Washington, D.C. 20008

NASA Enterprise Area: Mission to Planet Earth
Telephone: (202) 274-5855
Fax: (202) 274-6360
E-mail: mooreaes@erols.com

Jet Propulsion Laboratory

Electromagnetic Wave Scattering from Volumes and Surfaces—The Aerosols and Ice Surfaces Electromagnetic Scattering

Principal Investigator: Dr. Rosa M. Fitzgerald
Department of Physics
University of Texas at El Paso
500 West University Avenue
El Paso, Texas 79968-0515

NASA Enterprise Area: Mission to Planet Earth
Telephone: (915) 747-7530
Fax: (915) 747-4547 or (915) 532-4978
E-mail: rfitzger@utep.edu

Studies on Neptunian and Uranian Magnetospheres

Principal Investigator: Dr. Tian-Sen Huang
Department of Physics
Prairie View A&M University
P.O. Box 561
Prairie View, Texas 77446

NASA Enterprise Area: Space Science
Telephone: (409) 857-2859
Fax: (409) 857-4148
E-mail: tshuang@spacvax.rice.edu

Johnson Space Center

Effect of Microgravity on the Disposition and Biotransformation of Therapeutic Agents Used in Space Flight: Clenbuterol as a Model

Principal Investigator: Dr. David E. Potter
Department of Pharmacology
Morehouse School of Medicine
720 Westview Drive
Room 345
Atlanta, Georgia 30310-1495

NASA Enterprise Area: Space Science
Telephone: (404) 752-1710
Fax: (404) 752-1164
E-mail: potter@link.msm.edu

Intelligent Agents-based Scheduling

Principal Investigator: Dr. Bala Ram
Department of Industrial Engineering
North Carolina A&T State University
1601 East Market Street
Greensboro, North Carolina 27411

NASA Enterprise Area: Space Science
Telephone: (910) 334-7780
Fax: (910) 334-7729
E-mail: ram@ncat.edu

Kennedy Space Center

Applied Research in Industrial & Systems Engineering (ARISE) Center

Principal Investigator: Dr. Martha A. Centeno
Industrial and Systems Engineering Department
Florida International University
Miami, Florida 33199

NASA Enterprise Area: Mission to Planet Earth
Telephone: (305) 348-3531
Fax: (305) 348-3721
E-mail: centeno@eng.fiu.edu

Research and Education Experiences for Minority Undergraduates in Composite Materials

Principal Investigator: Dr. Sahib Chehl
Mechanical Engineering Department
Southern University and A&M College
Baton Rouge, Louisiana 70813

NASA Enterprise Area: Aeronautics and Space Transportation Technology
Telephone: (504) 771-4701
Fax: (504) 771-4877
E-mail: Chehl@coe.engr.subr.edu

NASA Minority Institution Entrepreneurial Partnership

Principal Investigator: Dr. Ann D. Taylor
Bethune-Cookman College
640 Dr. Mary McLeod Bethune Boulevard
Daytona Beach, Florida 32114-3099

NASA Enterprise Area: Human Exploration and Development of Space
Telephone: (904) 255-0115
Fax: (904) 258-8808
E-mail: taylora@cookman.edu

Langley Research Center

Development of a Portable Ground-Based Ozone LIDAR Instrument for Tropospheric Ozone Research and Educational Training

Principal Investigator: Dr. Thomas Chyba
Department of Physics
Hampton University
Hampton, Virginia 23668

NASA Enterprise Area: Mission to Planet Earth
Telephone: (757) 727 5824
Fax: (757) 728-6910
E-mail: t.h.chyba@larc.nasa.gov

Concepts for Atmospheric Science Education (CASE)

Principal Investigator: Dr. M.P. McCormick
Hampton University
23 Tyler Street
Hampton, Virginia 23668

NASA Enterprise Area: Mission to Planet Earth
Telephone: (757) 728-6867
Fax: (757) 727-5090
E-mail: mcc@hamptonu.edu

Lewis Research Center

Consortium for Advancing Renewable Energy Technology

Principal Investigator: Dr. Donald Henderson
Physics Department
Fisk University
1000 17th Street
PO Box 15
Nashville, TN 37208

NASA Enterprise Area: Space Science
Telephone: (615) 329-8622
Fax: (615) 329-8634

Research and Education in Probabilistic Structural Analysis and Reliability

Principal Investigator: Dr. Lola Boyce
Division of Engineering
University of Texas at San Antonio
6900 North Loop 1604 West
San Antonio, Texas 78249

NASA Enterprise Area: Aeronautics and Space Transportation Technology
Telephone: (210) 458-5512
Fax: (210) 458-5586
E-mail: lboyce2@runner.utsa.edu

Marshall Space Flight Center

Curriculum Adjustments in Mathematics for Science and Engineering Programs

Principal Investigator: Dr. Enoch Temple
P.O. Box 326
Alabama A&M University
Normal, Alabama 35762

NASA Enterprise Area: Human Exploration and Development of Space
Telephone: (205) 851-5318
Fax: (205) 851-5931
E-mail: etemple@asnaam.aamu.edu

Stennis Space Center

JSU-NASA Partnerships for Research and Educational Programs

Principal Investigator: Dr. Paul B. Tchounwou
P.O. Box 18540
Jackson State University
Jackson, Mississippi 39217-0940

NASA Enterprise Area: Mission to Planet Earth
Telephone: (601) 973-3321
Fax: (601) 968-2058
E-mail: paul@stallion.jsums.edu

NASA Stennis/Tuskegee University Partnership Program

Principal Investigator: Dr. Eric Sheppard
Aerospace Science Engineering Department
Tuskegee University
Tuskegee, Alabama 36088

NASA Enterprise Area: Mission to Planet Earth
Telephone: (334) 727-8851
Fax: (334) 727-8090
E-mail: sheppard@acd.tusk.edu

APPENDICES

Index by Principal Investigator

Akins	Daniel L.	*Exploration of Properties of Aggregated Molecules for Optical Device Applications*	51
Alfano	Robert R.	*Tunable Solid State Lasers and Optical Imaging*	36
Apenyo	Kofi	*A Prototype Object-Oriented GIS*	58
Armstrong	Roy A.	*Analysis of the Inherent and Apparent Optical Properties in Case 1 and Case 2 Waters of the Caribbean Sea*	84
Attia	John O.	*Radiation Effects on DC-DC Converters*	90
Bourgin	Richard D.	*The Development of a New Generation Trapped Radiation Database*	55
Boyce	Lola	*Research and Education in Probabilistic Structural Analysis and Reliability*	94
Brown	Willie G.	*Optimal Rate Concept Acquisition for Classification of Remotely Sensed Spatial Data and Propulsion Test Data*	82
Burger	Arnold	*Novel Methods of Fabrication and Evaluation of Room Temperature X-Ray and Gamma-Ray CdZnTe Detectors*	88
Burger	Arnold	*Novel Method for Evaluation of Uniformity and Structural Homogeneity of Ternary Wide Gap Semiconductors*	90
Busby	Michael R.	*Center for Automated Space Science*	31
Cardelino	Beatriz	*Integrated Approach to the Prediction of Hyperpolarizability of Organic Crystals*	91
Carson-Isabelle	Laura	*Research to Significantly Enhance Composite Survivability at 550 Degrees F in Oxidative Environments*	76
Caulfield	J.	*Telemedicine and Rapid Identification of Microorganisms by Fourier Transform Infrared Spectroscopy*	90
Centeno	Martha A.	*Utilization of the SFC Database: A Framework for Modeling Shuttle Processing Operations*	62
Centeno	Martha A.	*Applied Research in Industrial & Systems Engineering (ARISE) Center*	93

Chehl	Sahib	*Research and Education Experiences for Minority Undergraduates in Composite Materials*	93
Chen	Peter C.	*Development of Synchronously Scanned Optical Parametric Oscillator (OPO) Coherent Antistokes Ramen Spectroscopy (CARS) as a New Probe for Hostile Environments*	71
Chyba	Thomas	*Development of a Portable, Ground-Based Ozone LIDAR Instrument for Troposheric Ozone Research and Educational Training*	94
Clark	Ronald D.	*Alliance for Nonlinear Optics*	43
Clouse	Jefferey	*Artificial Potential Field Based Motion Planning/Navigation in Two and Three Dimensional Dynamic Environments*	91
Coleman	Tommy L.	*Center for Hydrology, Soil Climatology and Remote Sensing*	22
Coomes	Marguerite	*Caffeine Metabolism: The Pharmacokinetics of Space Flight*	89
Dozier	Gerry V.	*Hybrid Motion Planning with Multiple Destinations*	50
Dunn	DeRome O.	*Phenylethynyl Containing Polyarylene Ethers/Polymides Resin Infiltration of Composites*	65
Durbin	Steven M.	*Cubic Boron Nitride Alphvoltaic Devices*	72
Dutt	Kamla	*Stimulated Microgravity: A Model for Human Neural Cell Plasticity and Angiogenisis*	61
Esterline	Albert	*Formal Foundations of Agents*	52
Esterline	Albert	*Motion Planning in a Society of Intelligent Mobile Agents*	91
Ferguson	Frederick	*Center for Aerospace Research (CAR)*	11
Fernandez-Sein	Rafael	*Tropical Center for Earth and Space Studies*	27
Fernandez-Sein	Rafael	*Partnership for Space Telecommunications Education*	92
Fitzgerald	Rosa M.	*Electromagnetic Wave Scattering from Volumes and Surfaces—The Aerosols and Ice Surfaces Electromagnetic Scattering*	92
Fitzpatrick	Patrick J.	*Boundary Layer Processes Affecting Tropical Cyclone Intensity Change*	55
Fogarty	Thomas N.	*Center for Applied Radiation Research*	18
Garmestani	Hamid	*Micromechanical Characterization and Texture Analysis of Direct Cast Titanium Alloy Strips*	66

Gates	Ann Q.	*Monitoring Software Through Integrity Constraint*	46
Gielisse	Peter	*Multilayer Thin Film Capacitors for High Performance Power Applications*	56
Hardy	Kenneth A.	*Basic Research in Atomic, Molecular, and Optical Physics in Support of NASA Strategic Enterprises*	52
Helm	Donald	*Laboratory Study of the Behavior of Saturated Sedimentary Material*	88
Henderson	Donald	*Consortium for Advancing Renewable Energy Technology*	94
Hill	Walter A.	*Center for Food and Environmental Systems for Human Exploration of Space*	19
Ho	Ping-Pei	*Picosecond Gated Optical Imaging of Dense Fuel Sprays*	77
Hsieh	Yuch P.	*Labile and Stable Soil Organic Carbon Pools Revealed by C-14 and C-13 Signatures*	83
Huang	Tian-Sen	*Studies on Neptunian and Uranian Magnetospheres*	93
Hubbard	Danny E.	*Polymerizable Monomer Reactants—Synthesis of Aryl Ethers*	73
Hurley	John S.	*Real-Time Prototyping Project*	89
Ibrahim	Essam A.	*Atomization in Impinging-Jet Injectors of Liquid-Propellant Rocket Engines*	78
Jamshidi	Mo	*Center for Autonomous Control Engineering*	13
Johnson	Leon	*Medgar Evans College Ocean and Environmental Science Research Program*	92
Johnson,III	Joseph A.	*Center for Nonlinear and Nonequalibrium Aeroscience*	9
Khanbilvardi	Reza	*Preservation of the Environment Through Education & Research on Remote Sensing of the Atmosphere & of Land Use/Land Cover Changes*	92
Lala	Parag K.	*Fault-Tolerant and Self-Checking Logic System Design*	57
Lee	Clinton B.	*High Tc Bolometer Development*	57
Leslie	Ian H.	*3-D Multiphase-Flow Modeling of Oxygen Flow Systems*	78
Liaw	Goang S.	*An Unconventional Three-Dimensional Computation of Transition Aerodynamics for RLV*	90
Lopez Diaz	Jose M.	*Estimation of Ocean Primary Productivity using In-situ Florescence and SeaWiFS*	53
Lowe	Larry L.	*Identification of Isolation of Microgravity Responsive cDNAs*	47

Lush	Gregory	*Basic Studies of CdTe Solar Cells*	59
Lyons	Donald R.	*Distributed Bragg Region Sensors with Aerospace Applications*	74
Lyons	Donald R.	*Ultra Sensitive Optical Strain Gauges for Plume Impingement Studies*	89
Marley	Mark S.	*Theoretical and Observational Studies of Solar and Extra-Solar Planetary Atmospheres*	46
Matta	Jaime	*Solar Ultraviolet-R Radiation and Public Health in Puerto Rico*	88
McClure	John	*Analysis of Friction Stir*	91
McCormick	M. P.	*Concepts for Atmospheric Science Education (CASE)*	94
Mintz	Eric A.	*High Performance Polymers and Composites Research Center*	8
Moeti	Lebone E.	*Chemically Derived Dense Alumina-Zirconia Composites for Improved Mechanical and Wear Erosion Properties*	49
Mortley	Desmond G.	*Sweetpotato Stem Cuttings Database in Preparation for Flight*	89
Muthukumaran	Gunasekaran	*Training Under-Represented Students in Biological Research at Fisk University*	91
Nelson	Michael L.	*Object-Oriented Software Control Architecture for Robotic Vehicles*	79
Potter	David E.	*Effect for Microgravity on the Disposition and Biotransformation of Therapeutic Agents Used in Space Flight: Clenbuterol as a Model*	93
Quintana	Rolando	*A Continuous Hazard Tracking and Failure Prediction Methodology*	64
Ram	Bala	*Intelligent Agents-based Scheduling*	93
Reynolds	Gregory A.	*Active Control of Aerodynamic Noise Sources*	67
Rishe	Naphtali	*High Performance Database Management with Applications to Earth Sciences*	38
Roberts	Rodney G.	*Control and Calibration of an Automatic Radiator Inspection Device (ARID)*	64
Rodriguez	Waldo J.	*Visualization of Atmospheric Water Vapor Data for Stratospheric Aerosol and Gas Experiment (SAGE)*	70
Rubaai	Ahmed	*Experimental Evaluation of Motor Drive Technologies for Future Aerospace Applications*	90

Ryaciotaki-Boussallis	Helen	*The Use of Decentralized Control in Design of a Large Segmented Space Reflector*	41
Sachdeva	Mandip S.	*Development of a Transdermal Delivery Device for Melatonin in Vivo*	48
Sanford	Gary L.	*Assessing the Putative Mechanisms of Gravity-Induced Cellular Changes*	60
Schulz	Mark J.	*Health Monitoring of Composite Material Structures Using a Vibrometry Technique*	80
Seif	Mohammed A.	*Identification of Surface and Near Surface Defects and Damage Evaluation*	68
Sheppard	Eric	*A Study of the Fluid Mechanics of Reacting Flows in Selected Aerospace Propulsion Devices*	83
Sheppard	Eric	*NASA Stennis/Tuskegee University Partnership Program*	95
Shivakumar	Kunigal N.	*Aerothermo Structural Analysis Of Low Cost Composite Nozzel/Inlet Components*	89
Silberman	Enrique	*Center for Photonic Materials and Devices*	13
Smith	Alphonso C.	*Development of an Ultrsonic and Fabry-Perot Interferometer (FPI) for Nondestructive Inspection of Aging Aircraft*	49
Sridaran	Rajagopala	*Gravity-Induced Changes of the Steriodalgenisis by Luteal Cells for the Pregnant Rat*	62
Starks	Scott A.	*Pan American Center for Earth and Environmental Studies*	29
Stevenson-Hawk	Denise	*The Accuracy of Earth Observing System Measurements of Middle Atmosphere Dynamics*	56
Taylor	Ann D.	*NASA Minority Institution Entrepreneurial Partnership*	93
Tchounwou	Paul B.	*JSU-NASA Partnerships for Research and Educational Programs*	94
Teller	Patricia	*Verification of NASA Mission-Critical Software Without Sacrificing Performance*	88
Temple	Doyle	*Research Center for Optical Physics*	25
Temple	Enoch	*Curriculum Adjustments in Mathematics for Science and Engineering Programs*	94
Thierry-Palmer	Myrtle	*Space Medicine and Life Sciences Research Center*	16
Thorpe	Arthur N.	*Center for the Study of Terrestrial and Extraterrestrial Atmospheres*	25

Thorpe	Arthur N.	*CSTEA HBCU Academic and Research Consortium (CHARC)*	92
Trivedi	S.K.	*Air Traffic Control Using Neural Networks: A Proposal for Research and Educational Enhancement*	91
Usevitch	Bryan	*Low Complexity, Refigurable Circuits for Data Compression*	59
Veazie	David R.	*Constitutive Modeling and Testing of Polymer Matrix Composites Incorporating Physical Aging at Elevated Temperatures*	69
Walton	Connie	*NLO Polymers that have Enhanced Thermal Stability and Low Alignment Decay and the Use of Microgravity to Optimize NLO Properties*	82
Wang	Cheng-Shung	*Composite Truss Design Optimization*	90
Wiener	Brad R.	*Land Management in the Tropics and its Effects on the Global Environment*	40
White	Gary L.	*Surfactant/Supercritical Fluid Cleaning of Contaminated Substances*	64
White	Samuel G.	*Mixing, Noise and Thrust Benefits Using Corrugated Designs*	89
Williams	Joseph C.	*Characterization of Molecular Interactions at Polymer/Metal Surfaces and Interphases*	71
Williams	Michael D.	*Growth and Characterization of III-V Semicondutors for Device Applications*	74
Williams	Conrad	*The Magnetic, Transport & Structural Properties of Pulsed Laser Deposited Magnetic Oxide Films*	88
Wu	Chivey	*Computer Simulation of Multidisciplinary Engineering*	88
Wyche-Moore	Gloria	*Partnership Award with Minority Universities and Colleges*	92
Yang	Chia H.	*Effects of Aerosols and Cloud Interactions on UV, PAR and Crop Yields*	54
Yeboah	Yaw D.	*Turbulent Premixed Methane-Air Combustion*	75

Index by State

AL	Alabama A&M University	*Center for Hydrology, Soil Climatology and Remote Sensing*	22
AL	Alabama A&M University	*An Unconventional Three-Dimensional Computation of Transition Aerodynamics for RLV*	90
AL	Alabama A&M University	*Curriculum Adjustments in Mathematics for Science and Engineering Programs*	94
AL	Tuskegee University	*Center for Food and Environmental Systems for Human Exploration of Space*	19
AL	Tuskegee University	*Identification of Surface and Near Surface Defects and Damage Evaluation*	68
AL	Tuskegee University	*Atomization in Impinging-Jet Injectors of Liquid-Propellant Rocket Engines*	78
AL	Tuskegee University	*A Study of the Fluid Mechanics of Reacting Flows in Selected Aerospace Propulsion Devices*	83
AL	Tuskegee University	*Sweetpotato Stem Cuttings Database in Preparation for Flight*	89
AL	Tuskegee University	*NASA Stennis/Tuskegee University Partnership Program*	95
CA	California State University, Los Angeles	*The Use of Decentralized Control in Design of a Large Segmented Space Reflector*	41
CA	California State University, Los Angeles	*Computer Simulation of Multidisciplinary Engineering*	88
DC	Howard University	*Center for the Study of Terrestrial and Extraterrestrial Atmospheres*	25
DC	Howard University	*The Development of a New Generation Trapped Radiation Database*	55
DC	Howard University	*Caffeine Metabolism: The Pharmacokinetics of Space Flight*	89
DC	Howard University	*Experimental Evaluation of Motor Drive Technologies for Future Aerospace Applications*	90
DC	Howard University	*CSTEA HBCU Academic and Research Consortium (CHARC)*	92
DC	University of the District of Columbia	*Partnership Award with Minority Universities and Colleges*	92

FL	Bethune-Cookman College	*NASA Minority Institution Entrepreneurial Partnership*	93
FL	Florida A&M University	*Center for Nonlinear and Nonequalibrium Aeroscience*	9
FL	Florida A&M University	*Development of a Transdermal Delivery Device for Melatonin in Vivo*	48
FL	Florida A&M University	*Multilayer Thin Film Capacitors for High Performance Power Applications*	56
FL	Florida A&M University	*Control and Calibration of an Automatic Radiator Inspection Device (ARID)*	64
FL	Florida A&M University	*Micromechanical Characterization and Texture Analysis of Direct Cast Titanium Alloy Strips*	66
FL	Florida A&M University	*Cubic Boron Nitride Alphvoltaic Devices*	72
FL	Florida A&M University	*Labile and Stable Soil Organic Carbon Pools Revealed by C-14 and C-13 Signatures*	83
FL	Florida International University	*High Performance Database Management with Applications to Earth Sciences*	38
FL	Florida International University	*Basic Research in Atomic, Molecular, and Optical Physics in Support of NASA Strategic Enterprises*	52
FL	Florida International University	*Utilization of the SFC Database: A Framework for Modeling Shuttle Processing Operations*	62
FL	Florida International University	*Applied Research in Industrial & Systems Engineering (ARISE) Center*	93
GA	Clark Atlanta University	*Chemically Derived Dense Alumina-Zirconia Composites for Improved Mechanical and Wear Erosion Properties*	49
GA	Clark Atlanta University	*High Performance Polymers and Composites Research Center*	8
GA	Clark Atlanta University	*The Accuracy of Earth Observing System Measurements of Middle Atmosphere Dynamics*	56
GA	Clark Atlanta University	*Constitutive Modeling and Testing of Polymer Matrix Composites Incorporating Physical Aging at Elevated Temperatures*	69
GA	Clark Atlanta University	*Growth and Characterization of III-V Semicondutors for Device Applications*	74
GA	Clark Atlanta University	*Real-Time Prototyping Project*	89

GA	Clark Atlanta University	*Turbulent Premixed Methane-Air Combustion*	75
GA	Morehouse School of Medicine	*Space Medicine and Life Sciences Research Center*	16
GA	Morehouse School of Medicine	*Assessing the Putative Mechanisms of Gravity-Induced Cellular Changes*	60
GA	Morehouse School of Medicine	*Stimulated Microgravity: A Model for Human Neural Cell Plasticity and Angiogenisis*	61
GA	Morehouse School of Medicine	*Gravity-Induced Changes of the Steriodalgenisis by Luteal Cells for the Pregnant Rat*	62
GA	Morehouse School of Medicine	*Effect of Microgravity on the Disposition and Biotransformation of Therapeutic Agents Used in Space Flight: Clenbuterol as a Model*	93
GA	Spelman College	*Development of Synchronously Scanned Optical Parametric Oscillator (OPO) Coherent Antistokes Ramen Spectroscopy (CARS) as a New Probe for hostile Environments*	71
GA	Spelman College	*Integrated Approach to the Prediction of Hyperpolarizability of Organic Crystals*	91
LA	Grambling State University	*Polymerizable Monomer Reactants—Synthesis of Aryl Ethers*	73
LA	Grambling State University	*NLO Polymers that have Enhanced Thermal Stability and Low Alignment Decay and the Use of Microgravity to Optimize NLO Properties*	82
LA	Southern University	*Composite Truss Design Optimization*	90
LA	Southern University	*Air Traffic Control Using Neural Networks: A Proposal for Research and Educational Enhancement*	91
LA	Southern University A&M College	*Effects of Aerosols and Cloud Interactions on UV, PAR and Crop Yields*	54
LA	Southern University and A&M College	*Research and Education Experiences for Minority Undergraduates in Composite Materials*	93
MD	Morgan State University	*Laboratory Study of the Behavior of Saturated Sedimentary Material*	88
MD	Morgan State University	*The Magnetic, Transport & Structural Properties of Pulsed Laser Deposited Magnetic Oxide Films*	88

MS	Jackson State University	*Boundary Layer Processes Affecting Tropical Cyclone Intensity Change*	55
MS	Jackson State University	*A Prototype Object-Oriented GIS*	58
MS	Jackson State University	*Optimal Rate Concept Acquisition for Classification of Remotely Sensed Spatial Data and Propulsion Test Data*	82
MS	Jackson State University	*JSU-NASA Partnerships for Research and Educational Programs*	94
NC	North Carolina A&T State University	*Hybrid Motion Planning with Multiple Destinations*	50
NC	North Carolina A&T State University	*Formal Foundations of Agents*	52
NC	North Carolina A&T State University	*Fault-Tolerant and Self-Checking Logic System Design*	57
NC	North Carolina A&T State University	*Sufactant/Supercritical Fluid Cleaning of Contaminated Substances*	64
NC	North Carolina A&T State University	*Phenylethynyl Containing Polyarylene Ethers/Polymides Resin Infiltration of Composites*	65
NC	North Carolina A&T State University	*Health Monitoring of Composite Material Structures Using a Vibrometry Technique*	80
NC	North Carolina A&T State University	*Aerothermo Structural Analysis Of Low Cost Composite Nozzel/Inlet Components*	89
NC	North Carolina A&T State University	*Artificial Potential Field Based Motion Planning/Navigation in Two and Three Dimensional Dynamic Environments*	91
NC	North Carolina A&T State University	*Motion Planning in a Society of Intelligent Mobile Agents*	91
NC	North Carolina A&T State University	*Intelligent Agents-based Scheduling*	93
NC	North Carolina A&T State University	*Center for Aerospace Research (CAR)*	11
NM	New Mexico Highlands University	*Alliance for Nonlinear Optics*	43
NM	New Mexico State University	*Theoretical and Observational Studies of Solar and Extra-Solar Planetary Atmospheres*	46

NM	New Mexico State University	*Active Control of Aerodynamic Noise Sources*	67
NM	New Mexico State University	*3-D Multiphase-Flow Modeling of Oxygen Flow Systems*	78
NM	University of New Mexico	*Center for Autonomous Control Engineering*	13
NY	City College of the City University of New York	*Picosecond Gated Optical Imaging of Dense Fuel Sprays*	77
NY	CUNY–Medgar Evans College	*Medgar Evans College Ocean and Environmental Science Research Program*	92
NY	The City College of CUNY	*Tunable Solid State Lasers and Optical Imaging*	36
NY	City College of the City University of New York	*Preservation of the Environment Through Education & Research on Remote Sensing of the Atmosphere & of Land Use/Land Cover Changes*	92
NY	The City College of the University New York	*Exploration of Properties of Aggregated Molecules for Optical Device Applications*	51
PR	Ponce School of Medicine	*Solar Ultraviolet-R Radiation and Public Health in Puerto Rico*	88
PR	University of Puerto Rico	*Partnership for Space Telecommunications Education*	92
PR	University of Puerto Rico–Mayagüez	*Tropical Center for Earth and Space Studies*	27
PR	University of Puerto Rico–Mayagüez	*Estimation of Ocean Primary Productivity using In-situ Florescence and SeaWiFS*	53
PR	University of Puerto Rico–Mayagüez	*Analysis of the Inherent and Apparent Optical Properties in Case 1 and Case 2 Waters of the Caribbean Sea*	84
PR	University of Puerto Rico, Rio Piedras	*Land Management in the Tropics and its Effects on the Global Environment*	40
SC	Benedict College	*Identification of Isolation of Microgravity Responsive cDNAs*	47
TN	Fisk University	*Center for Photonic Materials and Devices*	13
TN	Fisk University	*Novel Methods of Fabrication and Evaluation of Room Temperature X-Ray and Gamma-Ray CdZnTe Detectors*	88

TN	Fisk University	*Novel Method for Evaluation of Uniformity and Structural Homogeneity of Ternary Wide Gap Semiconductors*	90
TN	Fisk University	*Telemedicine and Rapid Identification of Microorganisms by Fourier Transform Infrared Spectroscopy*	90
TN	Fisk University	*Training Under-Represented Students in Biological Research at Fisk University*	91
TN	Fisk University	*Consortium for Advancing Renewable Energy Technology*	94
TN	Tennessee State University–Williams Campus	*Center for Automated Space Science*	31
TX	Prairie View A&M University	*Radiation Effects on DC-DC Converters*	90
TX	Prairie View A&M University	*Studies on Neptunian and Uranian Magnetospheres*	93
TX	Prairie View A&M University	*Center for Applied Radiation Research*	18
TX	Prairie View A&M University	*Research to Significantly Enhance Composite Survivability at 550 Degrees F in Oxidative Environments*	76
TX	The University of Texas at San Antonio	*Research and Education in Probabilistic Structural Analysis and Reliability*	94
TX	University of Texas–Pan American	*Object-Oriented Software Control Architecture for Robotic Vehicles*	79
TX	University of Texas at El Paso	*Pan American Center for Earth and Environmental Studies*	29
TX	University of Texas at El Paso	*Monitoring Software Through Integrity Constraint*	46
TX	University of Texas at El Paso	*Basic Studies of CdTe Solar Cells*	59
TX	University of Texas at El Paso	*Low Complexity, Refigurable Circuits for Data Compression*	59
TX	University of Texas at El Paso	*A Continuous Hazard Tracking and Failure Prediction Methodology*	64

TX	University of Texas at El Paso	*Verification of NASA Mission-Critical Software Without Sacrificing Performance*	88
TX	University of Texas at El Paso	*Analysis of Friction Stir*	91
TX	University of Texas at El Paso	*Electromagnetic Wave Scattering from Volumes and Surfaces—The Aerosols and Ice Surfaces Electromagnetic Scattering*	92
VA	Hampton University	*Research Center for Optical Physics*	25
VA	Hampton University	*Development of an Ultrasonic and Fabry-Perot Interferometer (FPI) for Nondestructive Inspection of Aging Aircraft*	49
VA	Hampton University	*High Tc Bolometer Development*	57
VA	Hampton University	*Characterization of Molecular Interactions at Polymer/Metal Surfaces and Interphases*	71
VA	Hampton University	*Distributed Bragg Region Sensors with Aerospace Applications*	74
VA	Hampton University	*Ultra Sensitive Optical Strain Gauges for Plume Impingement Studies*	89
VA	Hampton University	*Mixing, Noise and Thrust Benefits Using Corrugated Designs*	89
VA	Hampton University	*Development of a Portable, Ground-Based Ozone LIDAR Instrument for Troposheric Ozone Research and Educational Training*	94
VA	Hampton University	*Concepts for Atmospheric Science Education (CASE)*	94
VA	Norfolk State University	*Visualization of Atmospheric Water Vapor Data for Stratospheric Aerosol and Gas Experiment (SAGE)*	70